YAMAHA

PARTS CATALOGUE

YZF-R15

YAMAHA GENUINE Parts & Accessories

1CK1

YZF-R15 **(1CK1)** PARTS CATALOGUE

INDIA YAMAHA MOTOR PVT. LTD.

1st edition, September 2011 All rights reserved.
Any reprinting or unauthorized use without the written permission of
INDIA YAMAHA MOTOR PVT. LTD. is expressly prohibited.

Printed in INDIA

FOREWORD

This Parts Catalogue is related to the parts in use for the YAMAHA - 1CK1 When you are ordering replacement parts for 1CK1 refer to this Parts Catalogue and quote both part numbers and part names correctly.

1. Modifications or additions which have been made after issue of the Parts Catalogue will be announced in the Service Actions. It is advisible that according to the Service Action you make necessary corrections tothe Parts Catalogue on hand to keep it up-to-date.

2. Indication of No. of constituent parts for assembly.
   The numeral appearing to the right of each constituent part under the description indicates the quantity of such parts for each individual assembly unit.

EXAMPLE

Part No.	Description	Qty
1CK-WE140-09	CRANK SHAFT ASSY.	1
38B-H2100-00	BATTERY ASSY	1
90446-07805	HOSE	1
38B-E1102-00	CYLINDER HEAD	1

Colour Code	Colour Name	Abbreviation
1115	DEEP PURPLISH BLUE MET 1	DPBMY
0390	BLACK METALLICX	SMX
0121	VIVID RED COCKTAIL1	VRC1

NOTICE

The description and illustration in this Parts Catalogue may not necessarily match with the physical appearance of the parts.

INDIA YAMAHA MOTOR PVT. LTD. reserves the right to carry out modifications on the vehicle, parts or accessories, as may be considered necessary, without being obliged to update this Parts Catalogue immediately.

No part of this Publication may be reproduced without written permission of
INDIA YAMAHA MOTOR PVT. LTD.
Spare Parts Division

3. Applicable Serial No. and Color Code

1	Frame Serial No	XXX	1CK1	X	1	X	X	X	xxxxxx
		Mfr Code	Model Code	Prod No Code	Varient Code	Month Code	Year Code	Factory Code	Serial No
2	Frame Serial No		1CK1	xxxxxx					
			Model Code	Serial No.					

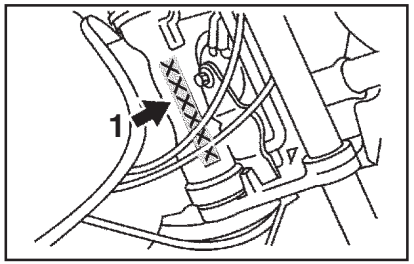

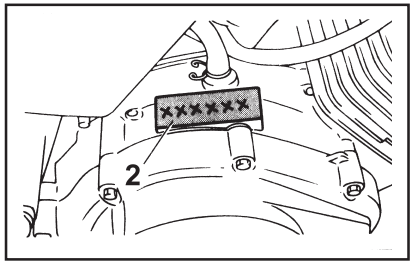

1. Parts number Structure

1) Common parts number

XXX-XXXXX-XX-XX

Example 1CK-E1400-09-00

Model

Function code
Major classification # E--F--H

Design Serial number
Design Revision
Change Modification

Color Codes Painted Parts

eg:-
1CK

Major classification	YMC number	Local number
Engine	1	E
Chassis	2	F
Electrical	8	H

00 → 01 → 02 → 09 Revision

00 → 10 → 11 → 19 Design

10 → 20 → 21 → 29 Further Design change

eg:-
1X/P0
2X/P1
3X/P2

Note:-
1) **'WE'** indicates Kit Assy. fixed by service for market.
2) **'XE'** indicates Sub Assy. & individual Parts not serviceable fixed by manufacturing.

Note:- Only Colored parts are 12 digit in Catalog - Rest are 10 Digits(Non-Coloured Parts)

2) Standard parts number /Regular parts number

Standard parts number ;

9XX-XXXXXXX

Type of Parts Ex:-
- **947XX=Plug spark**
- **932XX="O" Ring**
- **985XX=Screw pan head**

Regular parts number ;

9XXXX-XXXXX

Category Code Ex:-
- **901XX=Bolt and Nut**
- **902XX=Washer and Rivet**
- **903XX=Bush and Collor**
- **904XX=Hose and Clamp**
- **905XX=Springand spacer**

CONTENTS

ENGINE

CYLINDER 2
CRANKSHAFT/PISTON 3
VALVE 4
CAMSHAFT/CHAIN 5
WATER PUMP 6
RADIATOR & HOSE 7
OIL PUMP 8
INTAKE 9
EXHAUST 11
CRANKCASE 12
CRANKCASE COVER 1 13
STARTER CLUTCH 14
CLUTCH 15
TRANSMISSION 16
SHIFT CAM FORK 17
SHIFT SHAFT 18

CHASSIS

FRAME 19
FENDER 20
SIDE COVER 21
REAR ARM. & SUSPENSION 23
STEERING 25
FRONT FORK 26
FUEL TANK 28
SEAT 29
FRONT WHEEL 30
FRONT BRAKE CALIPER 31
REAR WHEEL 32
REAR BRAKE CALIPER 33
STEERING HANDLE & CABLE 34
FRONT MASTER CYLINDER 35
STAND FOOTREST 36
REAR MASTER CYLINDER 38
LEG SHIELD 39
WINDSHIELD 40
GENERATOR 42
STARTER MOTOR 43
FLASHER LIGHT 44
METER 46
HEAD LIGHT 47
TAIL LIGHT 48
HANDLE SWITCH & LEVER 49
ELECTRICAL 1 50
ELECTRICAL 2 51

NUMERICAL INDEX

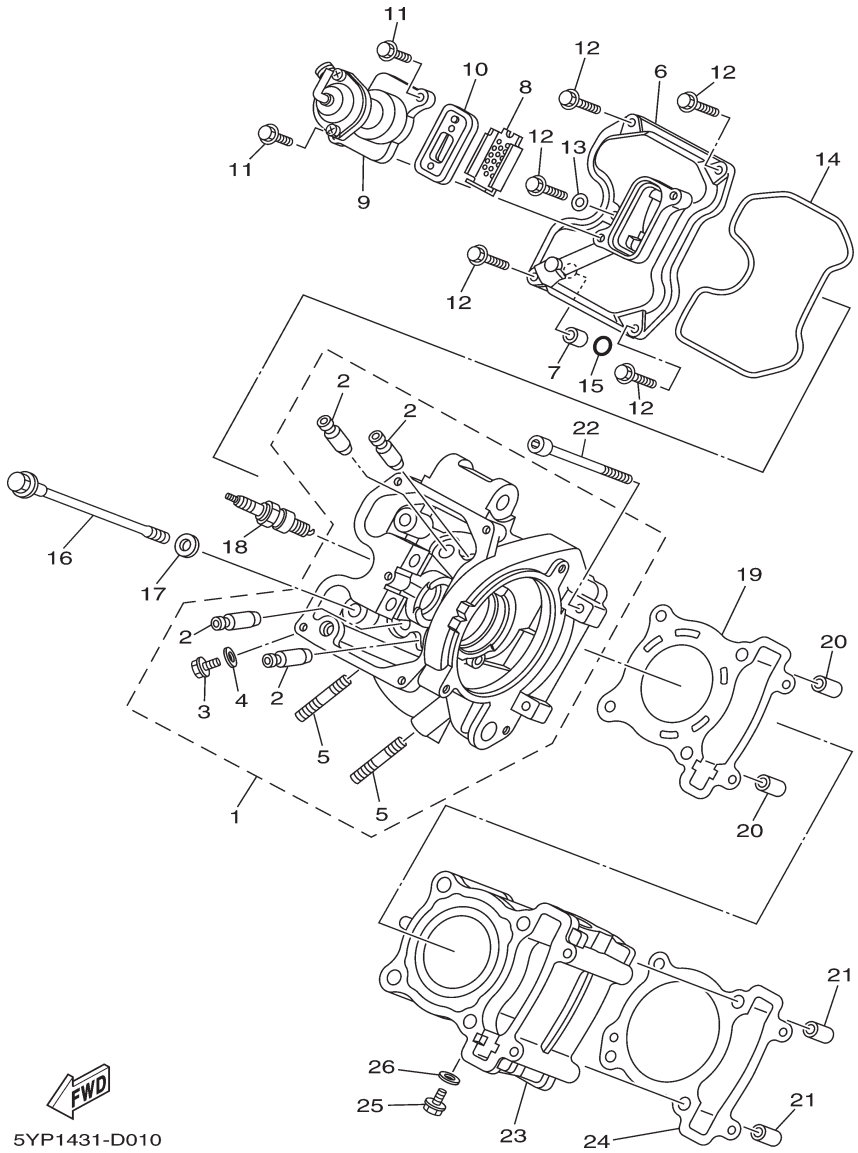

FIG. 1 (1) CYLINDER

REF. NO.	PART NO.	PART NAME	1CK1					REMARKS
1	38B-E1102-00	CYLINDER HEAD ASSY	1					
2	1S7-E1133-10	.GUIDE, VALVE 1	4					
3	90153-06002	.SCREW, HEXAGON	1					
4	90430-06014	.GASKET	1					
5	95617-08620	.BOLT, STUD	2					
6	38B-E1191-00	COVER, CYLINDER HEAD 1	1					
7	91811-10005	PIN, DOWEL	1					
8	5YP-1482K-00	PLATE	1					
9	38B-E4840-00	AIR CUT VALVE ASSY	1					
10	38B-E4890-00	REED VALVE ASSY	1					
11	95027-06014	BOLT, FLANGE	2					
12	95027-06020	BOLT, FLANGE	5					
13	90430-06014	GASKET	1					
14	38B-E1193-00	GASKET, HEAD COVER 1	1					
15	93210-11808	O-RING	1					
16	90105-08850	BOLT, FLANGE	4					
17	90201-08609	WASHER, PLATE	4					
18	94703-00883	PLUG, SPARK (NGK CR8E)	1					
19	1CK-E1181-00	GASKET, CYLINDER HEAD 1	1					
20	91810-14809	PIN, DOWEL	2					
21	91810-14809	PIN, DOWEL	2					
22	91317-06100	BOLT	2					
23	3C1-E1311-00	CYLINDER 1	1					
24	38B-E1351-00	GASKET, CYLINDER	1					
25	90153-06002	SCREW, HEXAGON	1					
26	90430-06014	GASKET						

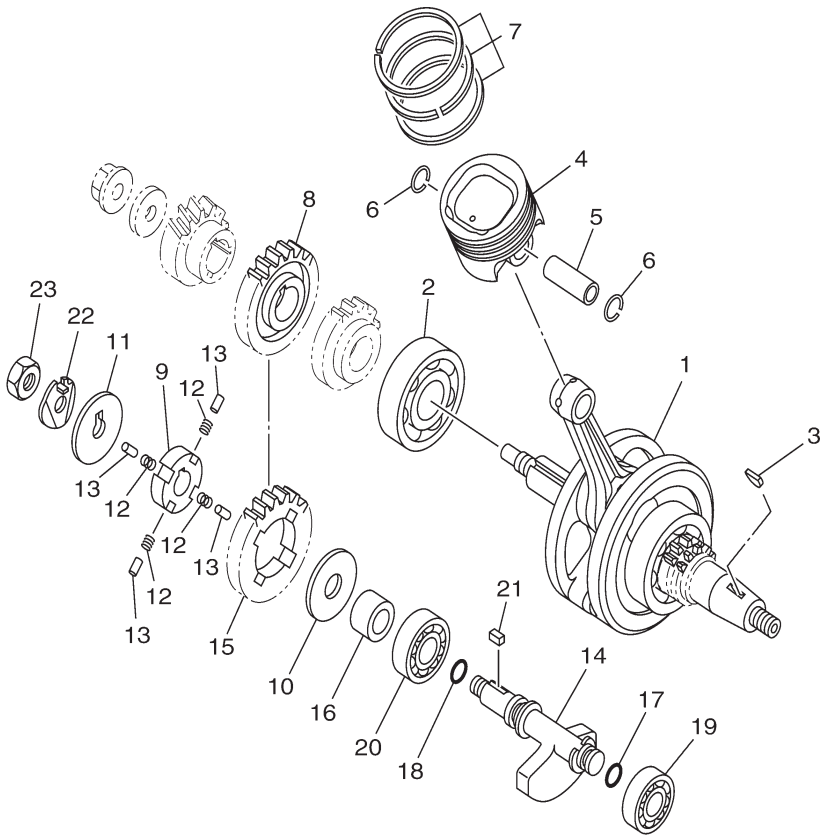

1CK1470-K020

FIG. 2 (1I0) CRANKSHAFT & PISTON

REF. NO.	PART NO.	PART NAME	1CK1					REMARKS
1	1CK-E1400-09	CRANKSHAFT ASSY	1					
2	93306-305X7	BEARING	1					
3	90280-03017	KEY, WOODRUFF	1					
4	3C1-E1631-11	PISTON (STD)	1					
5	38B-E1633-00	PIN, PISTON	1					
6	93450-16115	CIRCLIP	2					
7	3C1-11603-00	PISTON RING SET (STD)	1					
8	38B-E1536-10	GEAR, DRIVE	1					
9	21C-E1496-20	BOSS, BUFFER	1					
10	90201-15022	WASHER, PLATE	1					
11	90214-10006	WASHER, CLAW	1					
12	54B-E1476-00	SPRING	4					
13	21C-E3362-00	ROLLER	4					
14	38B-E1454-00	WEIGHT 1	1					
15	21C-E1531-00	GEAR, BALANCE WEIGHT	1					
16	90387-15810	COLLAR	1					
17	93210-11807	O-RING	1					
18	93210-13804	O-RING	1					
19	93306-202YD	BEARING	1					
20	93306-203XS	BEARING	1					
21	90282-05031	KEY, STRAIGHT	1					
22	90215-10284	WASHER, LOCK	1					
23	90170-10012	NUT	1					

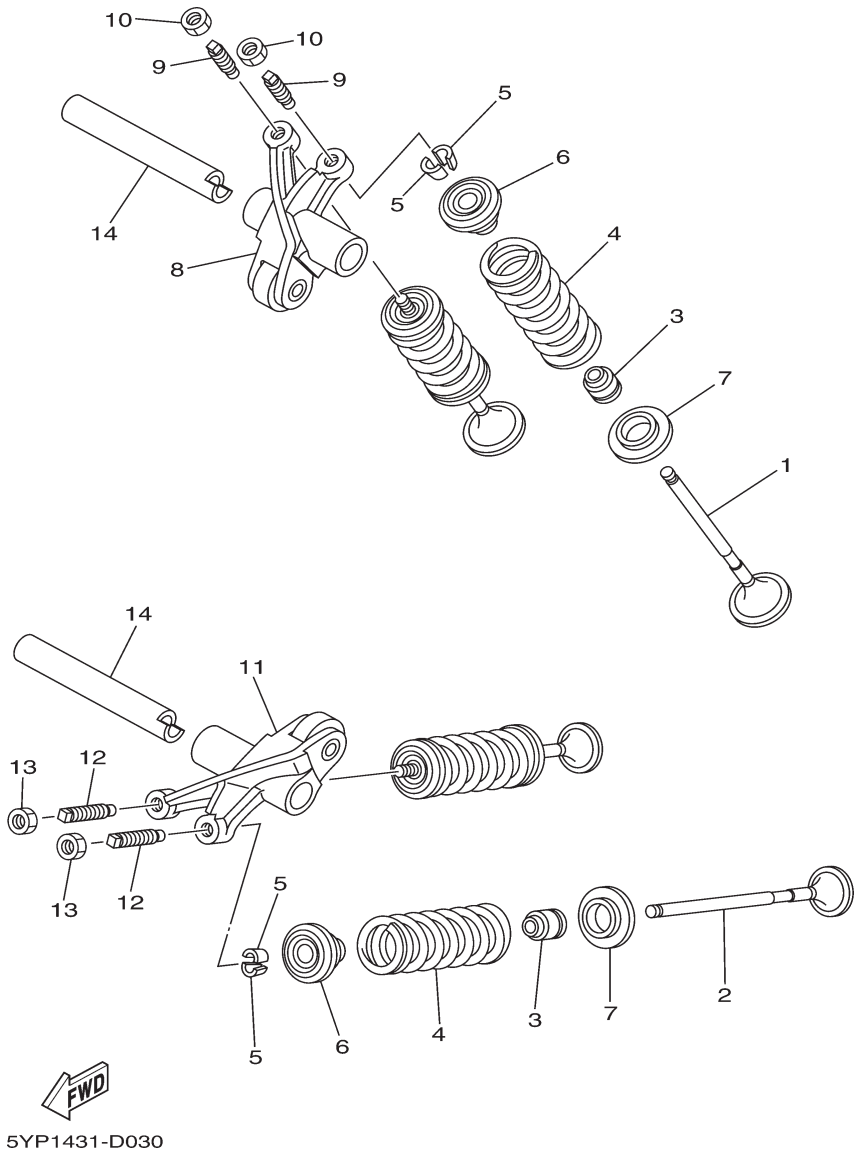

FIG. 3 (1M0) VALVE

REF. NO.	PART NO.	PART NAME	1CK1					REMARKS
1	5YP-E2111-00	VALVE, INTAKE	2					
2	5YP-E2121-00	VALVE, EXHAUST	2					
3	38B-E2119-00	SEAL, VALVE STEM	4					
4	38B-E2113-00	SPRING, VALVE INNER	4					
5	1WG-12118-00	COTTER, VALVE	8					
6	5YP-12117-00	RETAINER, VALVE SPRING	4					
7	38B-E2126-00	SEAT, VALVE SPRING 2	4					
8	38B-E2151-00	ARM, VALVE ROCKER	1					
9	3C1-12159-01	SCREW, VALVE ADJUSTING	2					
10	90170-05302	NUT	2					
11	38B-E2161-00	ARM, VALVE ROCKER 2	1					
12	3C1-12159-01	SCREW, VALVE ADJUSTING	2					
13	90170-05302	NUT	2					
14	5YP-E2156-00	SHAFT, ROCKER 2	2					

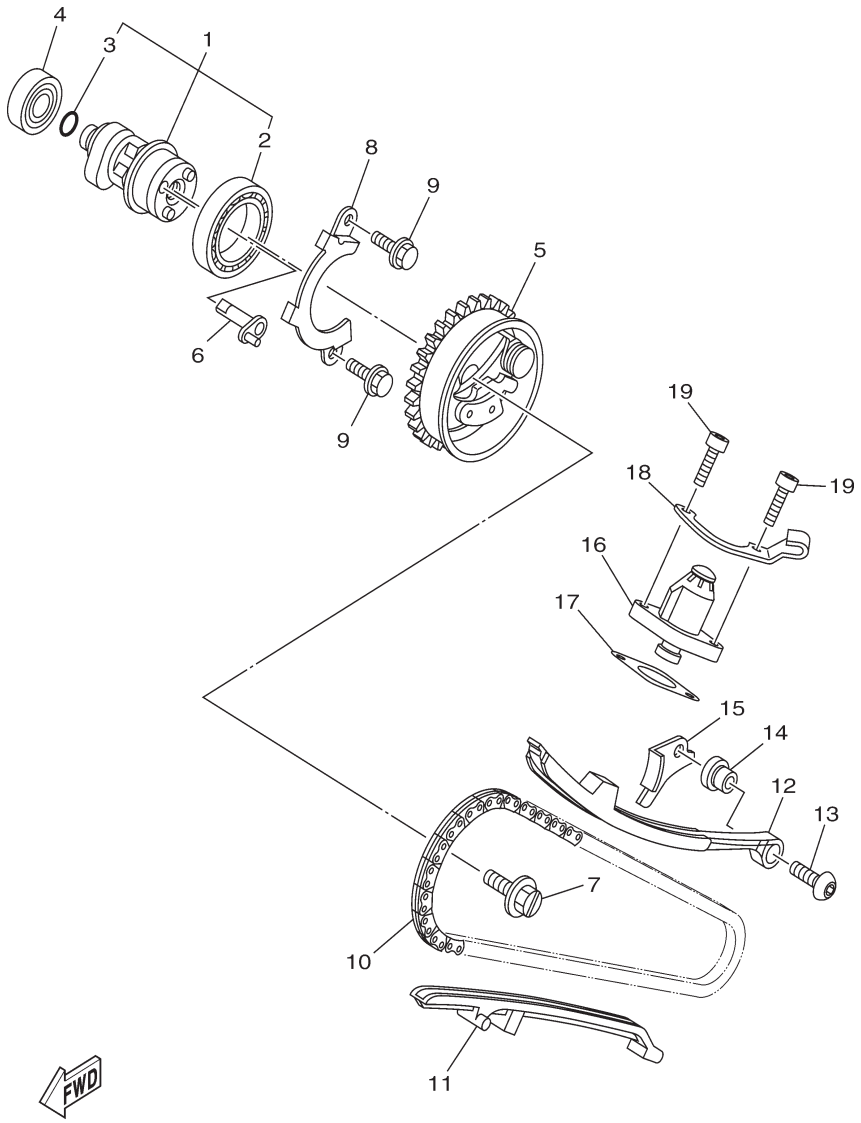

38B1470-H040

FIG. 4 (1N0) CAMSHAFT & CHAIN

REF. NO.	PART NO.	PART NAME	1CK1					REMARKS
1	38B-E2170-00	CAMSHAFT ASSY 1	1					
2	93306-906Y0	.BEARING	1					
3	93210-09809	.O-RING	1					
4	93306-001X7	BEARING	1					
5	38B-E2280-10	DECOMPRESSION ASSY	1					
6	5YP-E2288-00	CAM, DECOMPRESSION	1					
7	5YP-E2157-00	BOLT	1					
8	38B-E111F-00	PLATE	1					
9	95027-06010	BOLT, FLANGE	2					
10	94568-A8096	CHAIN	1					
11	38B-E2231-00	GUIDE, STOPPER 1	1					
12	38B-E2241-00	GUIDE, STOPPER 2	1					
13	90149-06829	SCREW	1					
14	38B-E5598-00	COLLAR	1					
15	38B-E2256-00	COVER, CHAIN	1					
16	38B-E2210-00	TENSIONER ASSY, CAM CHAIN	1					
17	1CK-E2213-00	GASKET, TENSIONER CASE	1					
18	38B-E5441-00	HOLDER, CLUTCH CABLE	1					
19	91317-06020	BOLT	2					

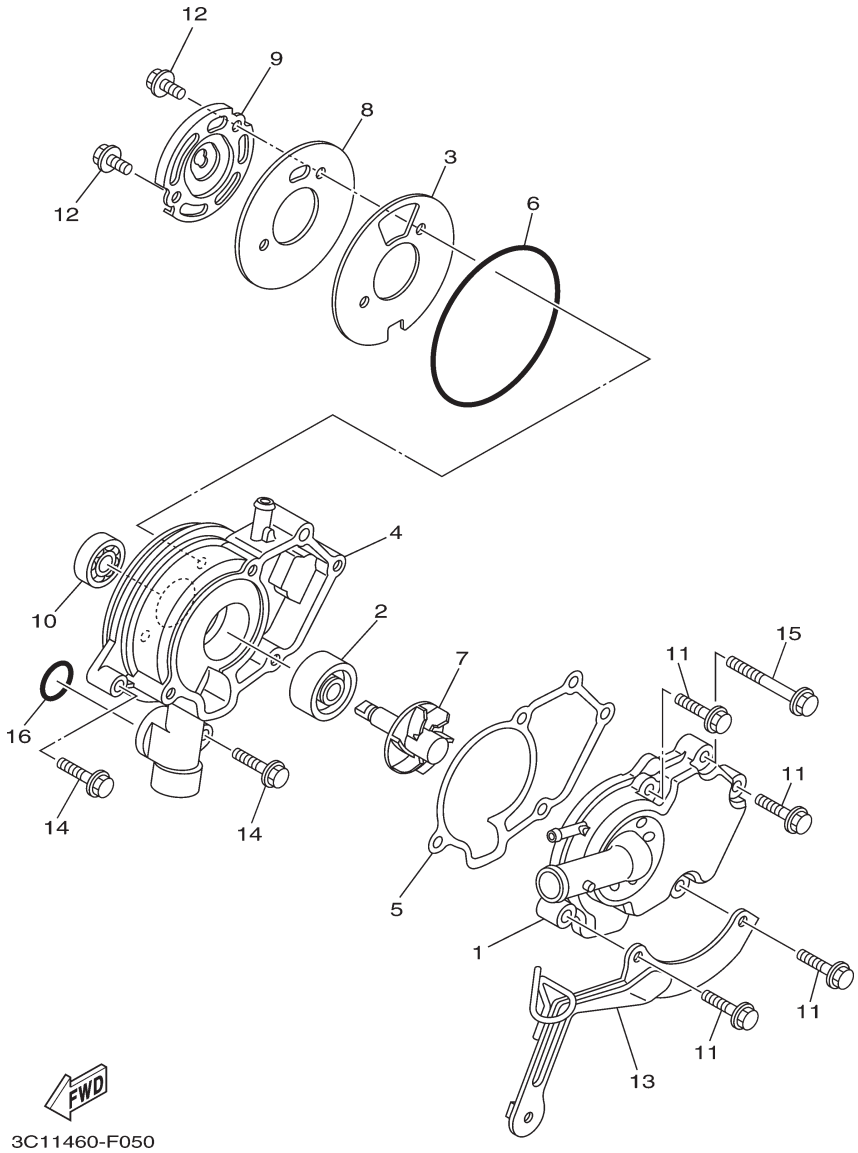

FIG. 5 (1Q0) WATER PUMP

REF. NO.	PART NO.	PART NAME	1CK1					REMARKS
1	38B-E2422-00	COVER, HOUSING	1					
2	93103-10804	OIL SEAL	1					
3	38B-E2428-00	GASKET, HOUSING COVER 2	1					
4	38B-E1185-00	COVER, CYLINDER HEAD SIDE 3	1					
5	38B-E1196-00	GASKET, CYLINDER HEAD SIDE	1					
6	93210-84802	O-RING	1					
7	38B-E2450-00	IMPELLER SHAFT ASSY	1					
8	38B-E1951-00	PLATE	1					
9	38B-E1952-00	PLATE	1					
10	93306-000Y5	BEARING	1					
11	95027-06025	BOLT, FLANGE	4					
12	95027-06012	BOLT, FLANGE	2					
13	38B-E2443-00	STAY	1					
14	95027-06025	BOLT, FLANGE	2					
15	95027-06050	BOLT, FLANGE	1					
16	93210-19809	O-RING	1					

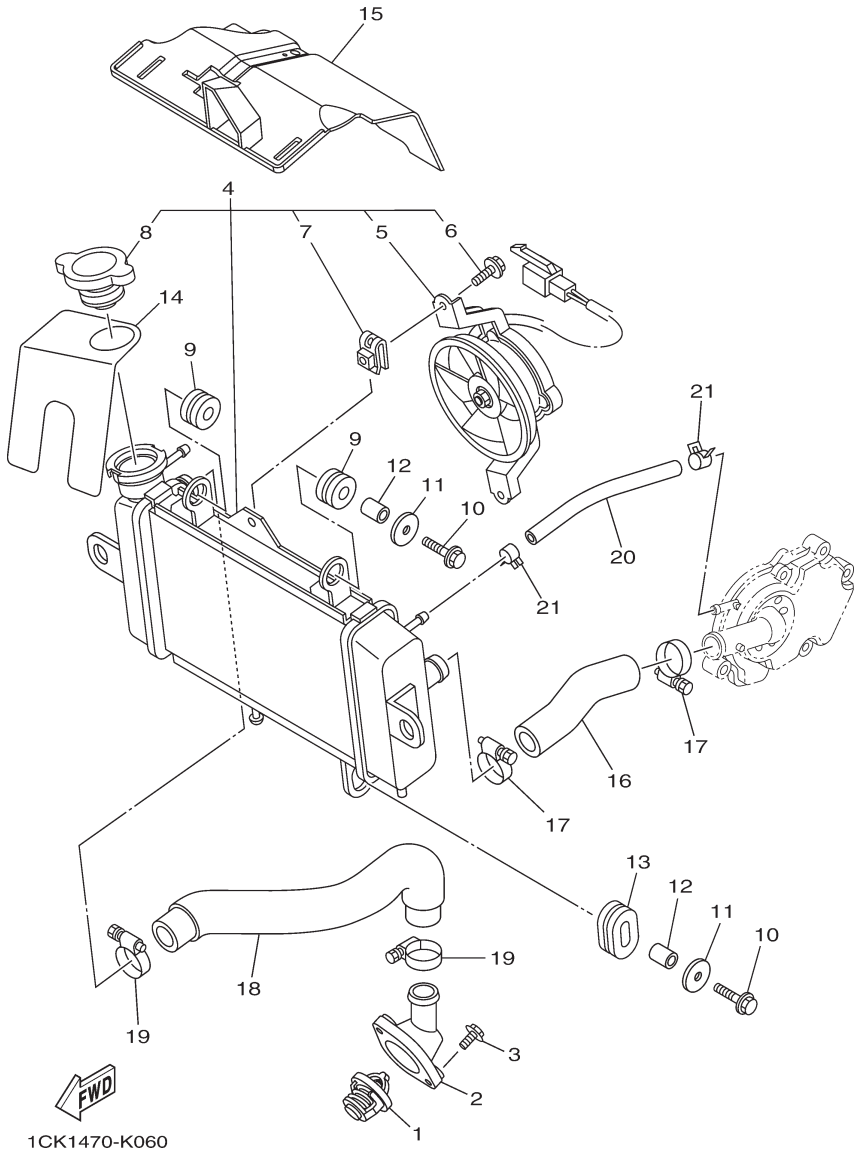

FIG. 6 (1R0) RADIATOR & HOSE

REF. NO.	PART NO.	PART NAME	1CK1					REMARKS
1	1CK-E2411-00	THERMOSTAT	1					
2	38B-E2413-00	COVER, THERMOSTAT	1					
3	95027-06020	BOLT, FLANGE	2					
4	38B-E240A-00	RADIATOR ASSY	1					
5	5YP-E2405-00	.BLOWER ASSY	1					
6	5YP-E2675-00	.BOLT, BLOWER HOLDING	2					
7	5YP-E2671-00	.NUT 1	2					
8	5ST-E2590-00	.CAP, RADIATOR	1					
9	90480-15363	GROMMET	2					
10	95827-06025	BOLT, FLANGE	2					
11	90201-06072	WASHER, PLATE	2					
12	90387-064W3	COLLAR	2					
13	90480-01803	GROMMET	1					
14	1CK-E246A-00	COVER 1	1					
15	20P-E2467-00	COVER, RADIATOR	1					
16	20P-E2481-00	PIPE 1	1					
17	90450-27803	HOSE CLAMP ASSY	2					
18	20P-E2482-00	PIPE 2	1					
19	90450-27803	HOSE CLAMP ASSY	2					
20	90445-12804	HOSE	1					
21	90467-10808	CLIP	2					

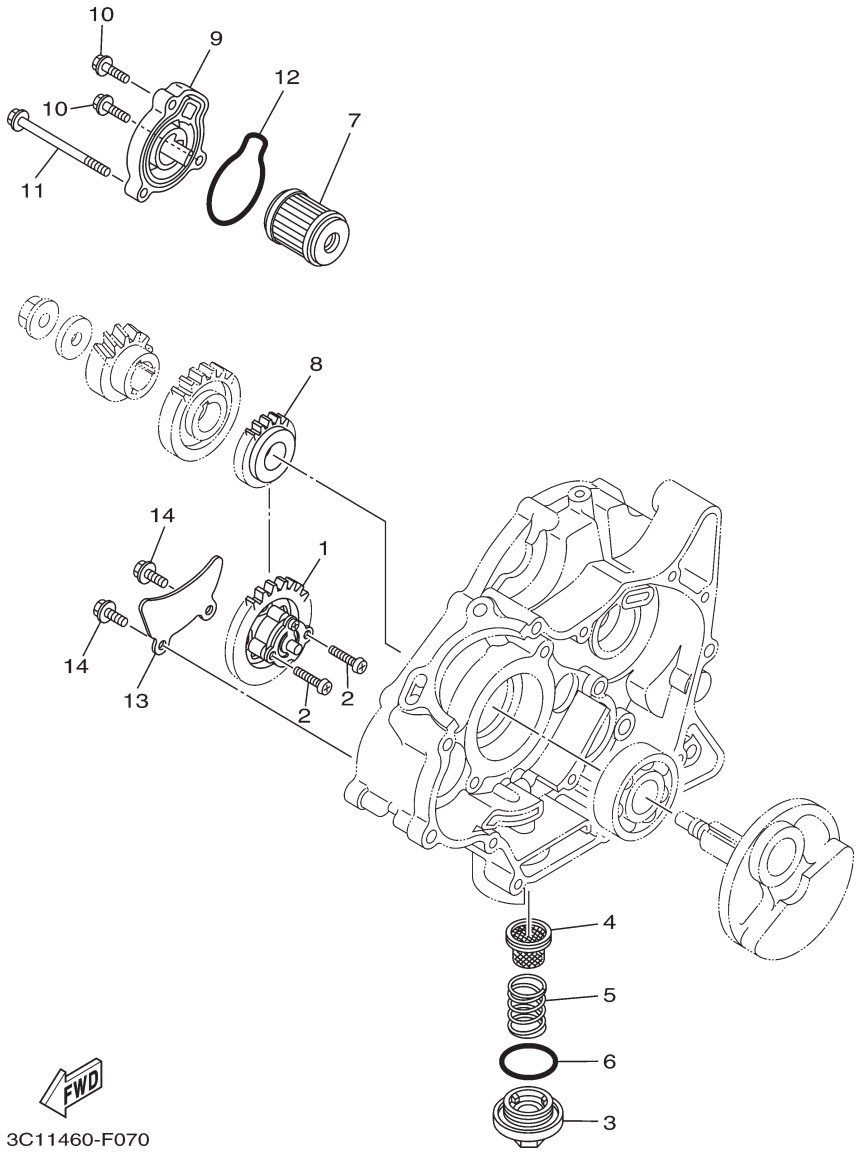

FIG. 7 (2C0) OIL PUMP

REF. NO.	PART NO.	PART NAME	1CK1					REMARKS
1	38B-E3300-00	OIL PUMP ASSY	1					
2	98507-05025	SCREW, PAN HEAD	2					
3	38B-E5351-00	PLUG, DRAIN	1					
4	38B-E3411-00	STRAINER, OIL	1					
5	90501-18576	SPRING, COMPRESSION	1					
6	93210-34805	O-RING	1					
7	38B-E3440-00	ELEMENT ASSY, OIL CLEANER	1					
8	38B-E3324-00	GEAR, PUMP DRIVE	1					
9	38B-E3447-00	COVER, OIL ELEMENT	1					
10	95022-06020	BOLT, FLANGE	2					
11	95022-06080	BOLT, FLANGE	1					
12	93210-54806	O-RING	1					
13	38B-E3327-00	COVER, PUMP GEAR	1					
14	95022-06012	BOLT, FLANGE	2					

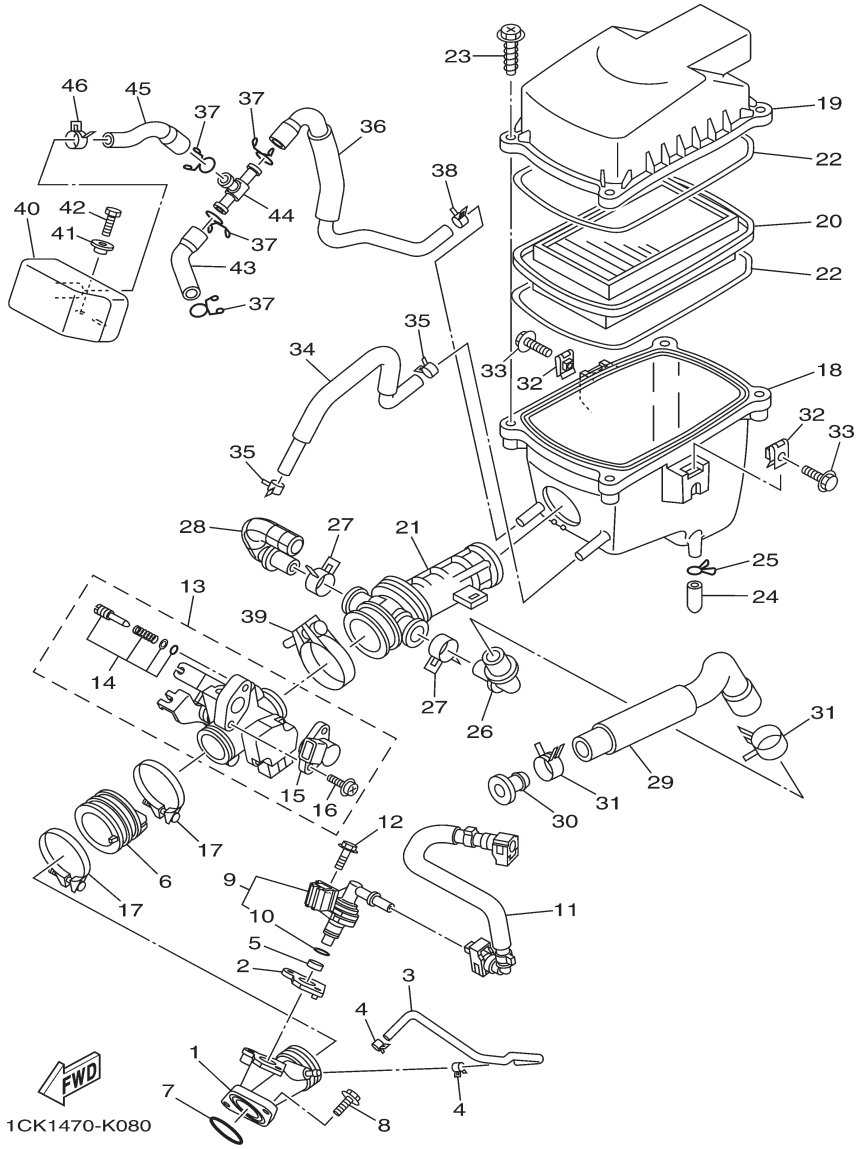

FIG. 8 (2J0) INTAKE

REF. NO.	PART NO.	PART NAME	1CK1					REMARKS
1	38B-E3585-00	MANIFOLD	1					
2	38B-E3556-00	GASKET, MANIFOLD	1					
3	38B-E3542-00	HOSE, VACUUM SENSING 1	1					
4	90467-08808	CLIP	2					
5	90430-09803	GASKET	1					
6	38B-E3586-00	JOINT, CARBURETOR 1	1					
7	93210-32807	O-RING	1					
8	95022-06020	BOLT, FLANGE	2					
9	3C1-13770-10	INJECTOR ASSY	1					
10	5CA-14147-00	.O-RING	1					
11	3C1-13971-00	PIPE, FUEL 1	1					
12	95817-06030	BOLT, FLANGE	1					
13	1CK-E3750-00	THROTTLE BODY ASSY	1					
14	5JW-14104-00	.AIR SCREW SET	1					
15	2S5-1410H-00	.FUEL CUT SOLENOID VALVE	1					
16	1S4-14216-00	.SCREW	2					
17	38B-E3575-00	BAND	2					
18	20P-E4411-00	CASE, AIR CLEANER 1	1					
19	20P-E4412-00	CAP, CLEANER CASE 1	1					
20	20P-E4450-00	ELEMENT ASSY, AIR CLEANER	1					
21	20P-E4453-00	JOINT, AIR CLEANER 1	1					
22	3C1-E4452-00	SEAL	2					
23	90163-05803	SCREW, TAPPING	4					
24	20P-E443E-00	PIPE, DRAIN	1					
25	90467-12800	CLIP	1					
26	20P-E4485-00	PIPE, JOINT	1					
27	90467-20050	CLIP	2					
28	20P-E4419-00	PIPE	1					
29	20P-E441J-00	PIPE, SILENCER	1					
30	90338-16008	PLUG	1					

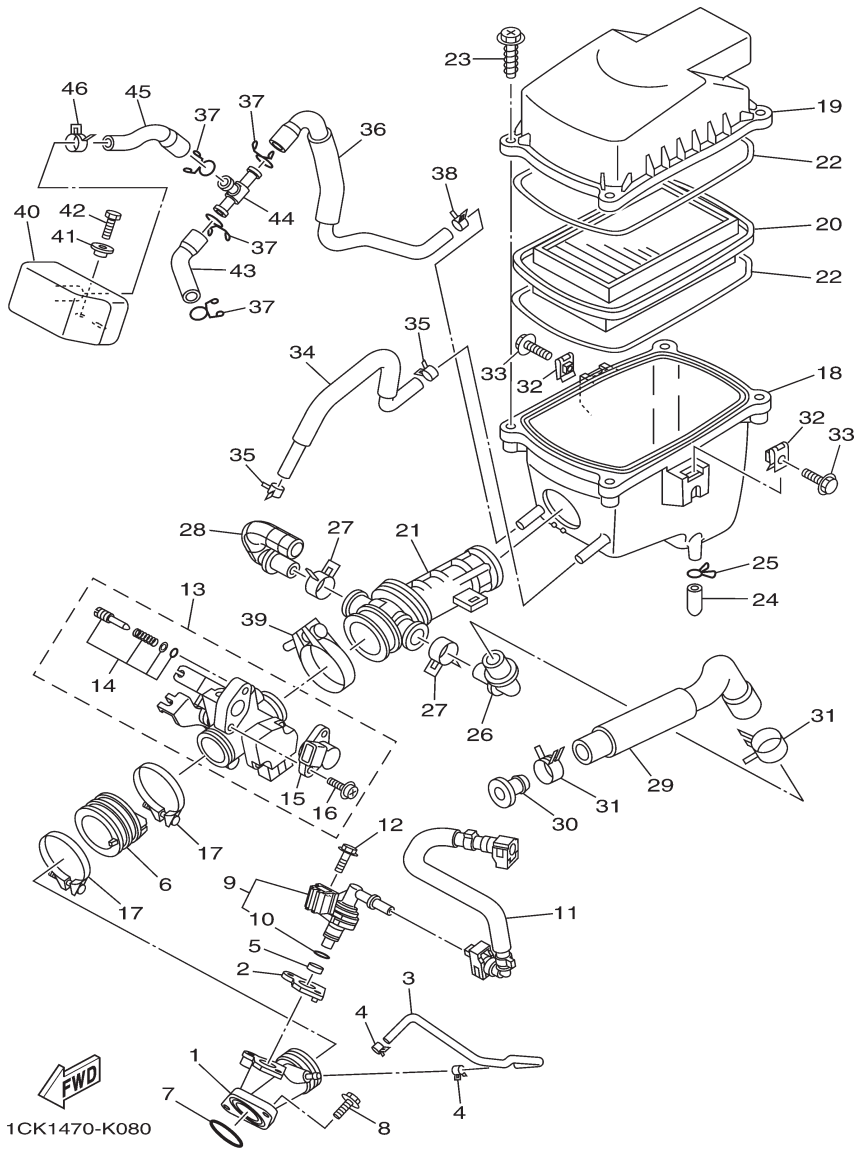

FIG. 8 (2J0) INTAKE

REF. NO.	PART NO.	PART NAME	1CK1					REMARKS
31	90467-23059	CLIP	2					
32	90183-06802	NUT, SPRING	2					
33	90119-06051	BOLT, WITH WASHER	2					
34	20P-E1166-00	PIPE, BREATHER 1	1					
35	90467-13816	CLIP	2					
36	20P-E4882-00	HOSE, BEND 2	1					
37	90467-15012	CLIP	4					
38	90467-13802	CLIP	1					
39	90450-39804	HOSE CLAMP ASSY	1					
40	20P-E4877-00	RESONATOR	1					
41	90387-068S1	COLLAR	2					
42	97027-06014	BOLT, HEXAGON	2					
43	20P-E4881-00	HOSE, BEND 1	1					
44	90413-13800	WAY 3	1					
45	20P-E4883-00	HOSE, BEND 3	1					
46	90467-16805	CLIP	1					

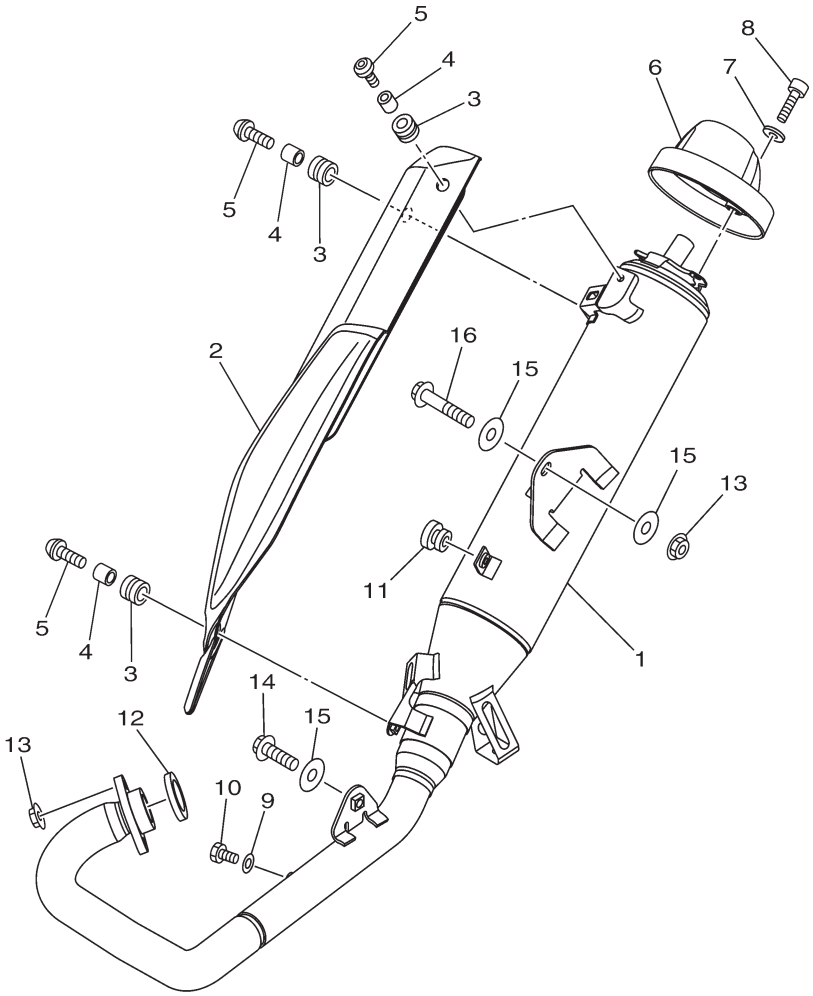

1CK1470-K090

FIG. 9 (2N0) EXHAUST

REF. NO.	PART NO.	PART NAME	1CK1					REMARKS
1	1CK-E4703-00	MUFFLER COMP. 1	1					
2	1CK-E4708-00	PROTECTOR ASSY	1					
3	90480-12581	GROMMET	3					
4	90387-06023	COLLAR	3					
5	90111-06826	BOLT,HEX. SOCKET BUTTON	3					
6	1CK-E4799-00	CAP	1					
7	92990-06200	WASHER, PLAIN	3					
8	91380-06016	BOLT	3					
9	92990-06600	WASHER, PLATE	1					
10	97080-06008	BOLT, HEX.	1					
11	90480-10805	GROMMET	1					
12	21C-E4613-00	GASKET, EXHAUST PIPE	1					
13	95707-08500	NUT, FLANGE	3					
14	95817-08025	BOLT, FLANGE	1					
15	90201-08612	WASHER, PLATE	3					
16	95817-08040	BOLT, FLANGE	1					

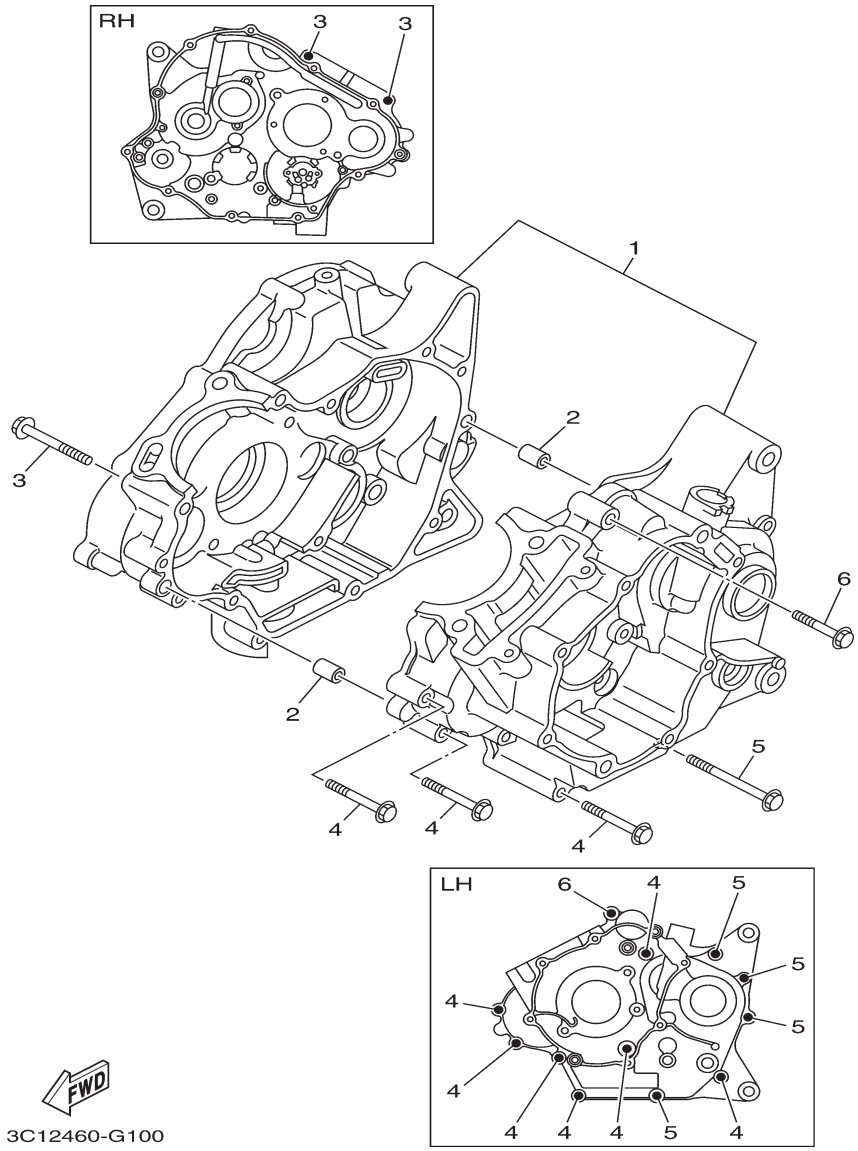

FIG. 10 (2R0) CRANKCASE

REF. NO.	PART NO.	PART NAME	1CK1					REMARKS
1	38B-E5150-00	CRANKCASE ASSY	1					
2	91810-14809	PIN, DOWEL	2					
3	95022-06055	BOLT, FLANGE	2					
4	95022-06045	BOLT, FLANGE	7					
5	95022-06070	BOLT, FLANGE	4					
6	95022-06040	BOLT, FLANGE	1					

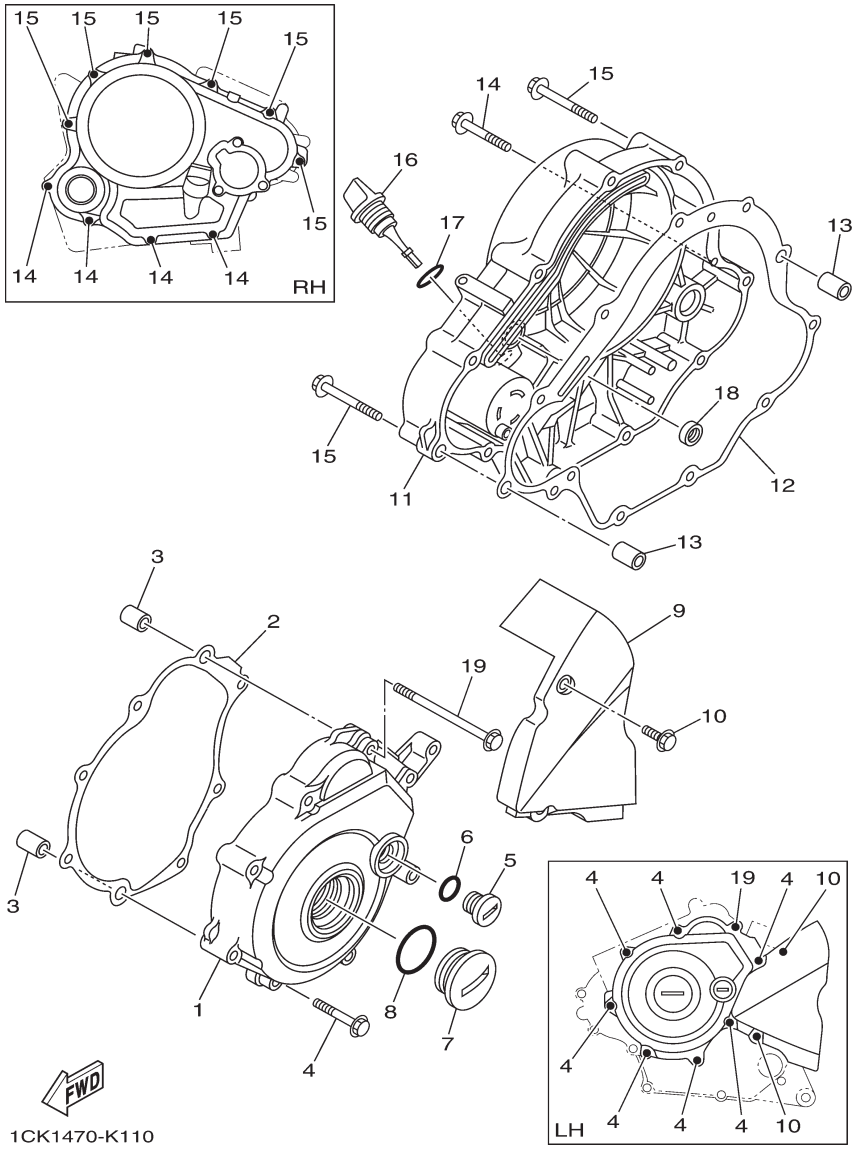

FIG. 11 (2S0) CRANKCASE COVER 1

REF. NO.	PART NO.	PART NAME	1CK1					REMARKS
1	38B-E5411-00	COVER, CRANKCASE 1	1					
2	1CK-E5451-00	GASKET, CRANKCASE COVER 1	1					
3	91810-14809	PIN, DOWEL	2					
4	95022-06040	BOLT, FLANGE	7					
5	90340-14824	PLUG, STRAIGHT SCREW	1					
6	93210-14812	O-RING	1					
7	90340-32823	PLUG, STRAIGHT SCREW	1					
8	93210-32813	O-RING	1					
9	38B-E5418-00	COVER, CHAIN CASE	1					
10	95022-06016	BOLT, FLANGE	2					
11	1CK-E5421-00	COVER, CRANKCASE 2	1					
12	1CK-E5461-00	GASKET, CRANKCASE COVER 2	1					
13	91810-14809	PIN, DOWEL	2					
14	95022-06040	BOLT, FLANGE	4					
15	95022-06050	BOLT, FLANGE	6					
16	38B-E5362-00	PLUG, OIL LEVEL	1					
17	93210-19809	O-RING	1					
18	93101-10805	OIL SEAL	1					
19	95022-06090	BOLT, FLANGE	1					

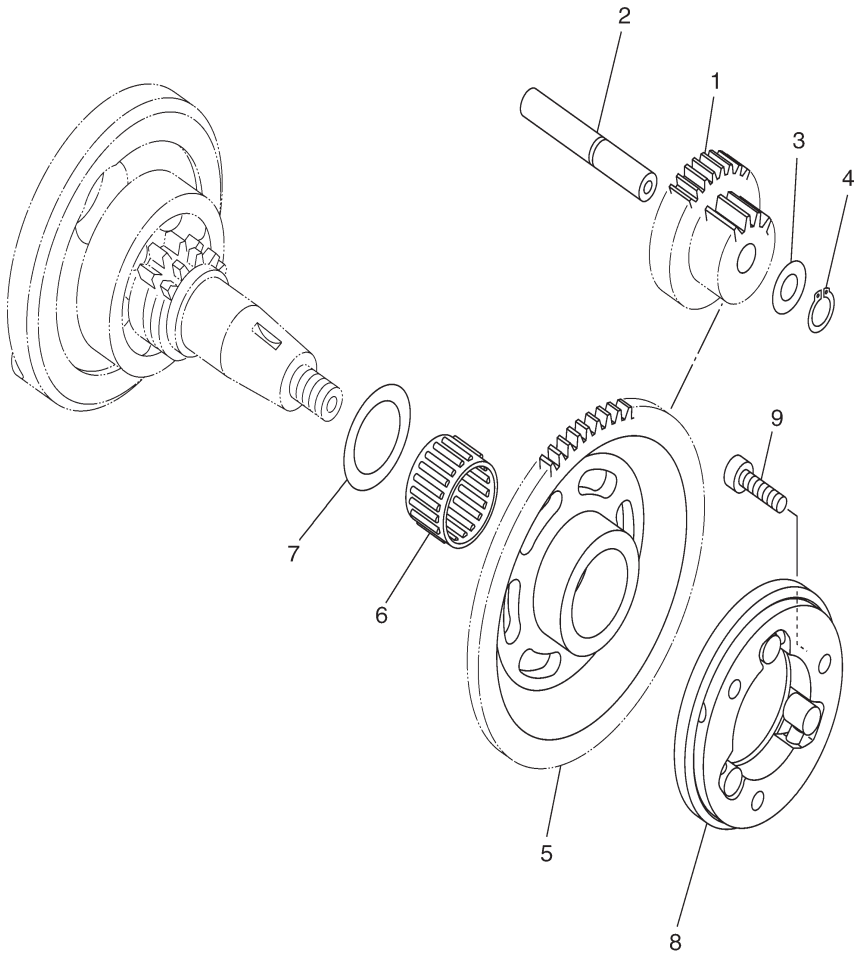

38B1470-H120

FIG. 12 (2V0) STARTER CLUTCH

REF. NO.	PART NO.	PART NAME	1CK1					REMARKS
1	1CK-E5514-00	GEAR 2	1					
2	38B-E5521-00	SHAFT 1	1					
3	90201-105E8	WASHER, PLATE	1					
4	99009-10400	CIRCLIP	1					
5	38B-E5524-10	WHEEL, STARTER	1					
6	93310-325X3	BEARING	1					
7	90201-25290	WASHER, PLATE	1					
8	54B-E5580-00	STARTER CLUTCH OUTER ASSY	1					
9	91317-06020	BOLT	3					

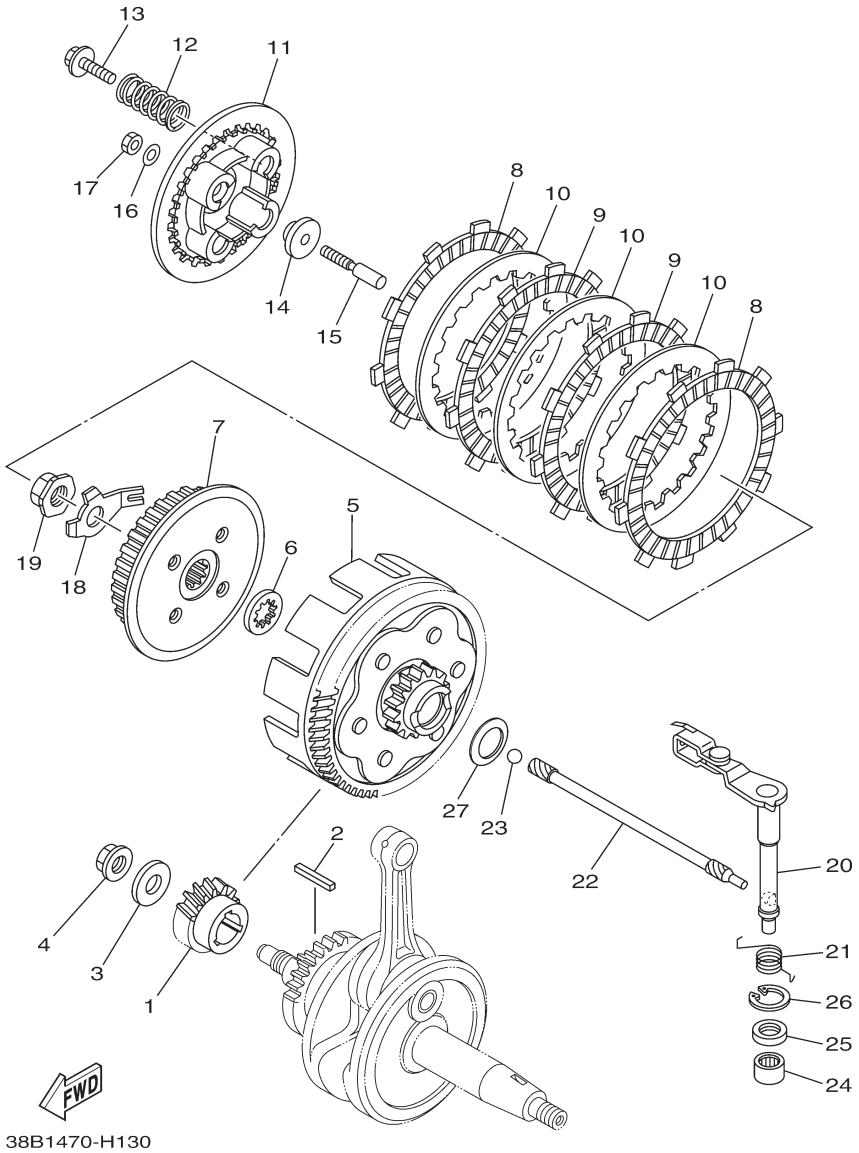

FIG. 13 (2X0) CLUTCH

REF. NO.	PART NO.	PART NAME	1CK1					REMARKS
1	38B-E6111-00	GEAR, PRIMARY DRIVE	1					
2	38B-E6193-00	KEY, FEATHER	1					
3	90201-12019	WASHER, PLATE	1					
4	90179-12802	NUT	1					
5	1CK-E6150-00	PRIMARY DRIVEN GEAR COMP.	1					
6	21C-E6154-00	PLATE, THRUST 1	1					
7	21C-E6371-00	BOSS, CLUTCH	1					
8	54B-E6321-00	PLATE, FRICTION	2					
9	21C-E6331-00	PLATE, FRICTION 2	2					
10	21C-E6324-00	PLATE, CLUTCH 1	3					
11	54B-E6351-00	PLATE, PRESSURE 1	1					
12	21C-E6333-00	SPRING, CLUTCH 1	4					
13	21C-E6337-00	SCREW, SPRING	4					
14	21C-E6358-00	PLATE, PUSH	1					
15	21C-E6356-01	ROD, PUSH 1	1					
16	54B-E6144-00	WASHER	1					
17	3C1-E6344-00	NUT, ADJUSTING	1					
18	21C-E6135-10	WASHER, LOCK	1					
19	90179-14001	NUT	1					
20	38B-E6380-01	PUSH LEVER ASSY	1					
21	1CK-E6345-00	SPRING, RETURN	1					
22	38B-E6357-01	ROD, PUSH 2	1					
23	93505-16844	BALL	1					
24	93315-112Y9	BEARING	1					
25	93102-12877	OIL SEAL	1					
26	99009-20500	CIRCLIP	1					
27	90208-20003	WASHER, CONICAL SPRING	1					

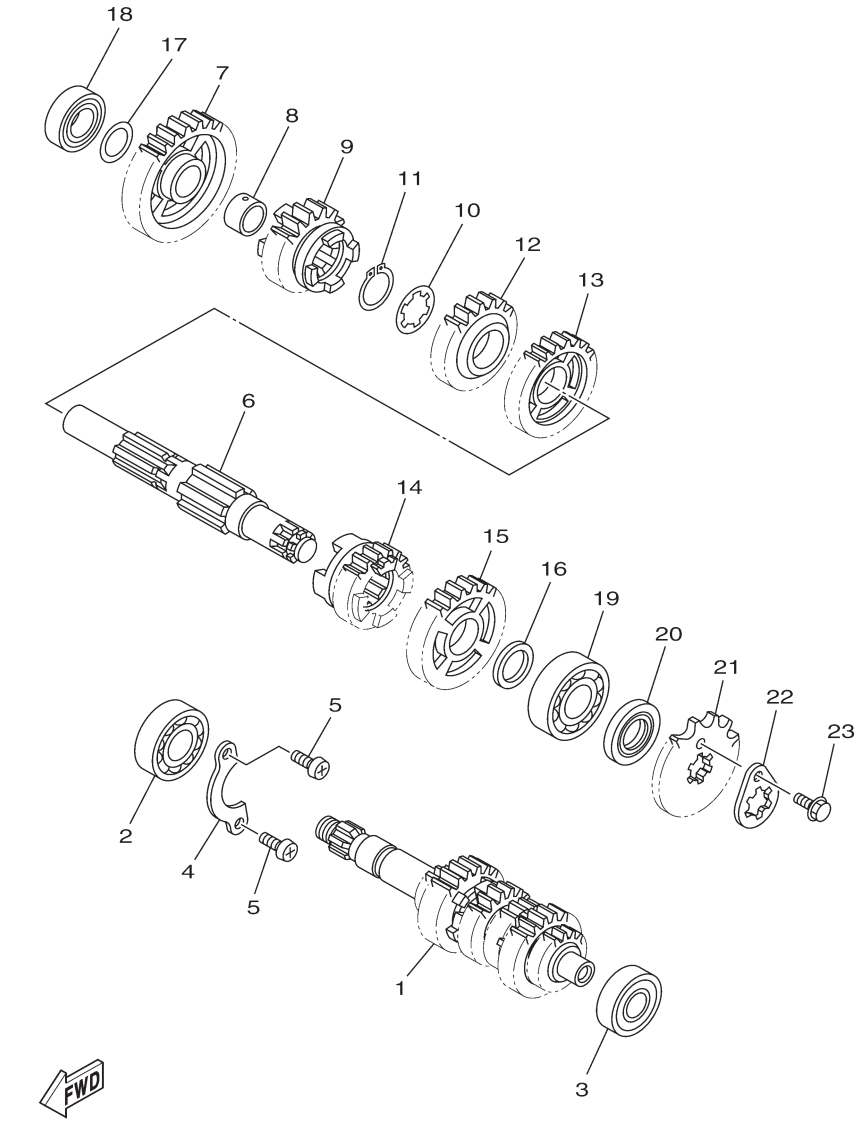

1CK1470-K141

FIG. 14 (2Z0) TRANSMISSION

REF. NO.	PART NO.	PART NAME	1CK1					REMARKS
1	38B-E7410-00	MAIN AXLE COMP.	1					
2	93306-004XX	BEARING	1					
3	93306-202YE	BEARING	1					
4	38B-E7471-00	PLATE, COVER	1					
5	98517-06012	SCREW, PAN HEAD	2					
6	1CK-E7402-00	DRIVE AXLE ASSY	1					
7	38B-E7211-00	GEAR, 1ST WHEEL (34T)	1					
8	38B-E7258-00	COLLAR 1	1					
9	38B-E7251-00	GEAR, 5TH WHEEL (22T)	1					
10	90209-18208	WASHER	1					
11	93410-22039	CIRCLIP	1					
12	38B-E7241-00	GEAR, 4TH WHEEL (24T)	1					
13	38B-E7231-00	GEAR, 3RD WHEEL (30T)	1					
14	38B-E7261-00	GEAR, 6TH WHEEL (21T)	1					
15	38B-E7221-00	GEAR, 2ND WHEEL (30T)	1					
16	90201-20814	WASHER, PLATE	1					
17	90201-173F4	WASHER, PLATE	1					
18	93306-003YN	BEARING	1					
19	93306-204Y6	BEARING	1					
20	93102-20806	OIL SEAL	1					
21	93822-15808	SPROCKET, DRIVE (15T)	1					
22	4LS-E7456-00	HOLDER, SPROCKET	1					
23	95027-06010	BOLT, FLANGE	1					

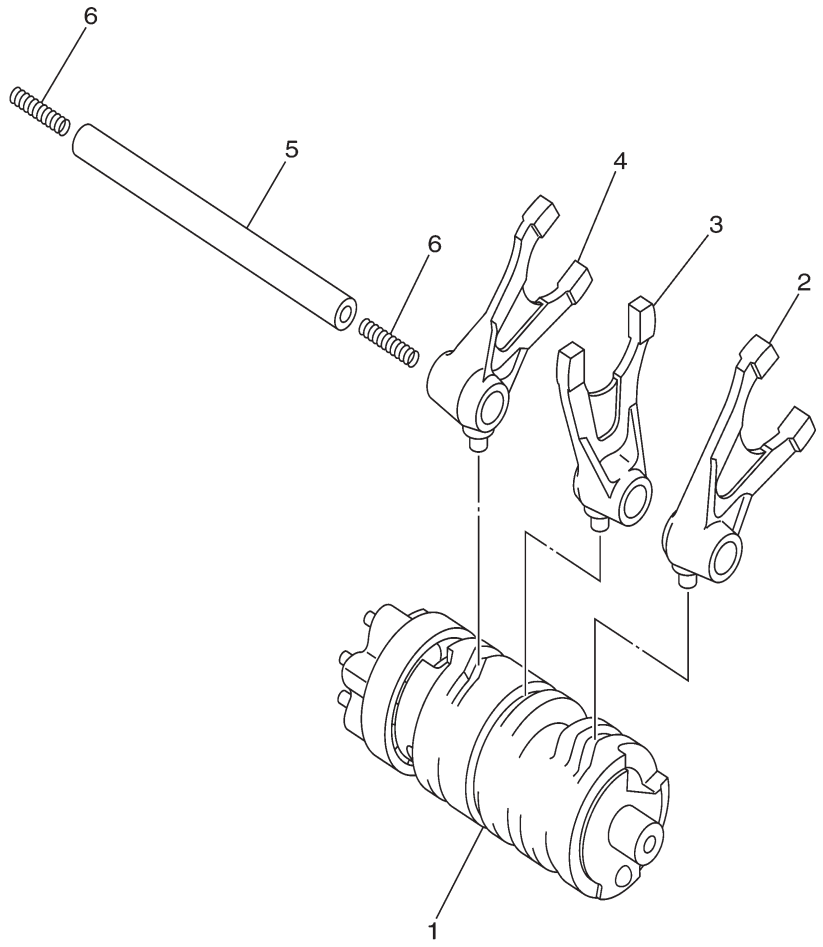

3C11460-F160

FIG. 15 (3J0) SHIFT CAM & FORK

REF. NO.	PART NO.	PART NAME	1CK1					REMARKS
1	1CK-E8540-00	SHIFT CAM ASSY	1					
2	38B-E8511-00	FORK, SHIFT 1	1					
3	38B-E8512-00	FORK, SHIFT 2	1					
4	38B-E8513-00	FORK, SHIFT 3	1					
5	38B-E8531-00	BAR, SHIFT FORK GUIDE 1	1					
6	90501-06800	SPRING, COMPRESSION	2					

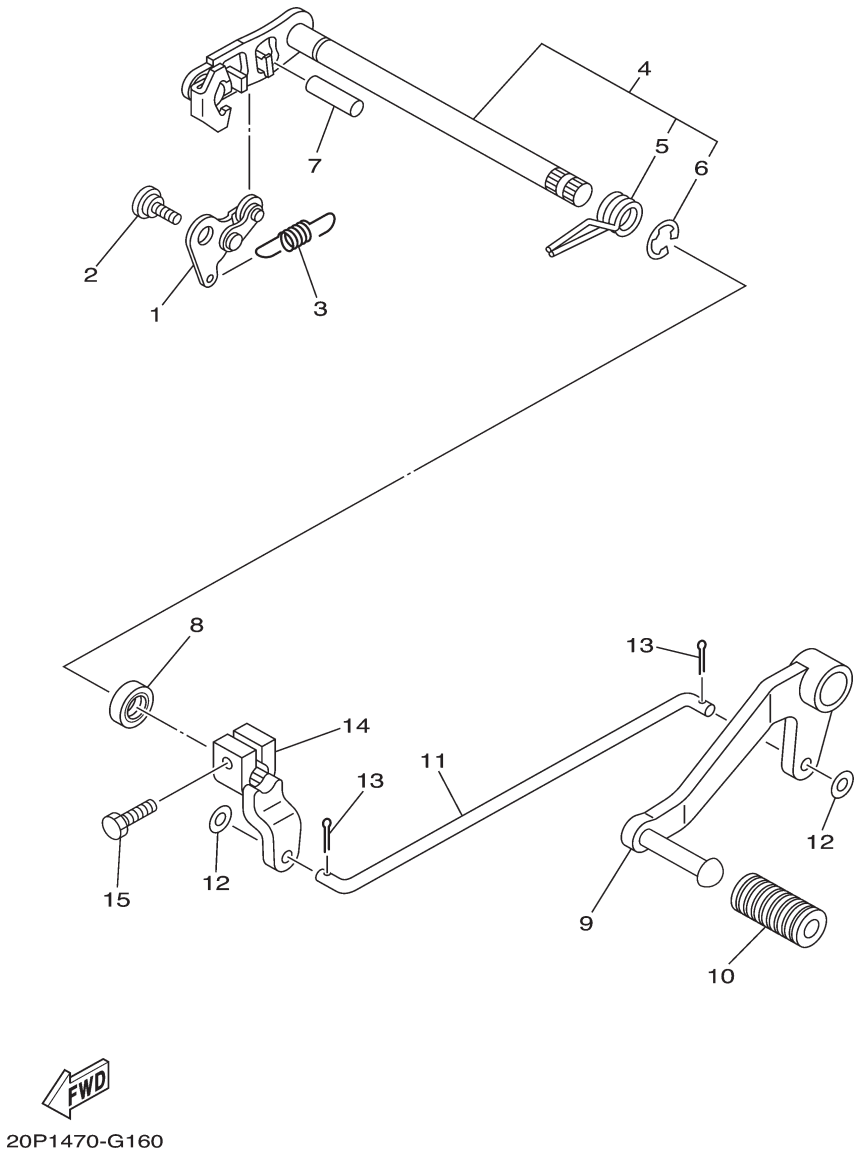

FIG. 16 (3K0) SHIFT SHAFT

REF. NO.	PART NO.	PART NAME	1CK1					REMARKS
1	21C-E8140-00	STOPPER LEVER ASSY	1					
2	90109-06259	BOLT	1					
3	38B-E8337-00	SPRING	1					
4	38B-E8101-00	SHIFT SHAFT ASSY	1					
5	90508-32837	.SPRING, TORSION	1					
6	99001-10600	.CIRCLIP	1					
7	93608-30839	PIN, DOWEL	1					
8	93102-12809	OIL SEAL	1					
9	20P-E8111-01	PEDAL, SHIFT	1					
10	20P-E8113-00	COVER, SHIFT PEDAL	1					
11	20P-E8115-00	ROD, SHIFT	1					
12	92907-06200	WASHER	2					
13	91401-20012	PIN, COTTER	2					
14	20P-E8112-01	ARM, SHIFT	1					
15	97024-06020	BOLT	1					

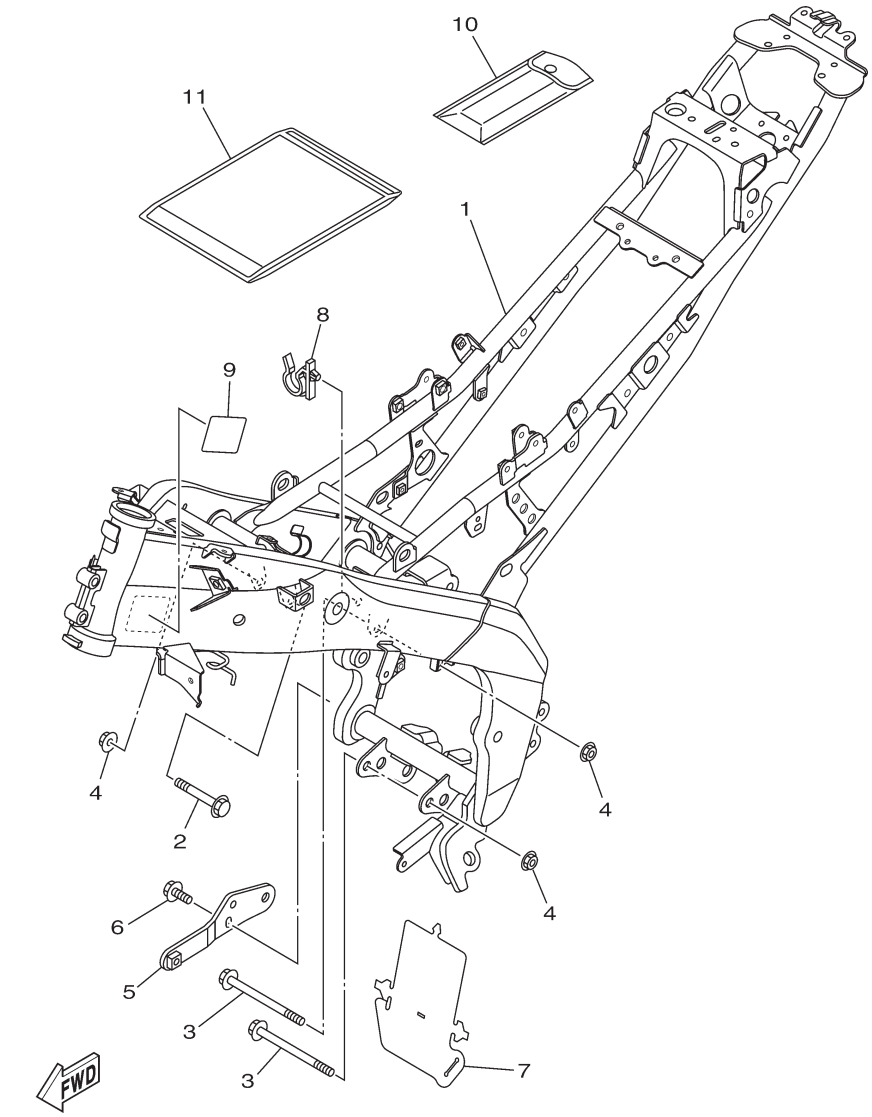

1CK1470-K170

FIG. 17 (3M0) FRAME

REF. NO.	PART NO.	PART NAME	1CK1					REMARKS
1	1CK-F1110-00	FRAME COMP.	1					
2	90105-10323	BOLT, FLANGE	1					
3	90105-10857	BOLT, FLANGE	2					
4	90179-10811	NUT	3					
5	20P-F8284-00	BRACKET, UNDER	1					
6	95817-08016	BOLT, FLANGE	2					
7	20P-F2327-00	MUD GUARD 1	1					
8	20P-F1338-00	CLAMP	1					
9	1CK-F117G-00	PROTECTOR	1					
10	1CK-F8100-00	TOOL KIT	1					
11	1CK-F8186-00	POUCH	1					

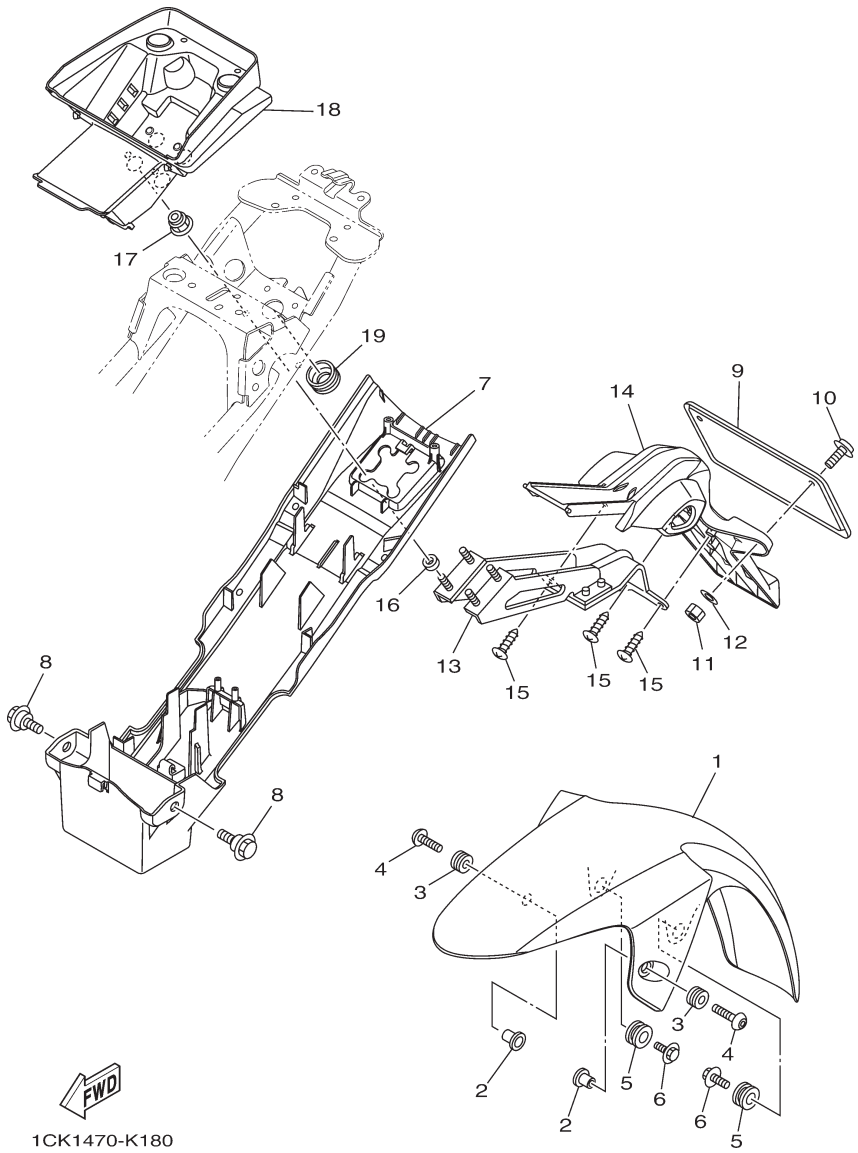

FIG. 18 (3Q0) FENDER

REF. NO.	PART NO.	PART NAME	1CK1					REMARKS
1	1CK-F1511-00-1X	FENDER, FRONT -DPBMY	1					FOR DPBMY
	1CK-F1511-00-2X	FENDER, FRONT -SMX	1					FOR SMX
	1CK-F1511-00-3X	FENDER, FRONT -VRC1	1					FOR VRC1
2	90387-068C8	COLLAR	2					
3	90480-12805	GROMMET	2					
4	90111-06117	BOLT,HEX. SOCKET BUTTON	2					
5	90480-18859	GROMMET	2					
6	90119-06233	BOLT, WITH WASHER	2					
7	1CK-F1611-00	FENDER, REAR	1					
8	90109-06220	BOLT	2					
9	5TS-F1681-20	PLATE, LICENSE	1					
10	97607-06214	SCREW,WITH WASHER	2					
11	95307-06600	NUT	2					
12	90201-06557	WASHER, PLATE	2					
13	1CK-F1640-00	REAR STAY COMP.	1					
14	1CK-F1629-00	GUARD, MUD	1					
15	97702-50016	SCREW, TAPPING	3					
16	90387-068G0	COLLAR	4					
17	95602-06200	NUT, SELF-LOCKING	4					
18	1CK-F160E-00	BOX	1					
19	90480-25482	GROMMET	1					

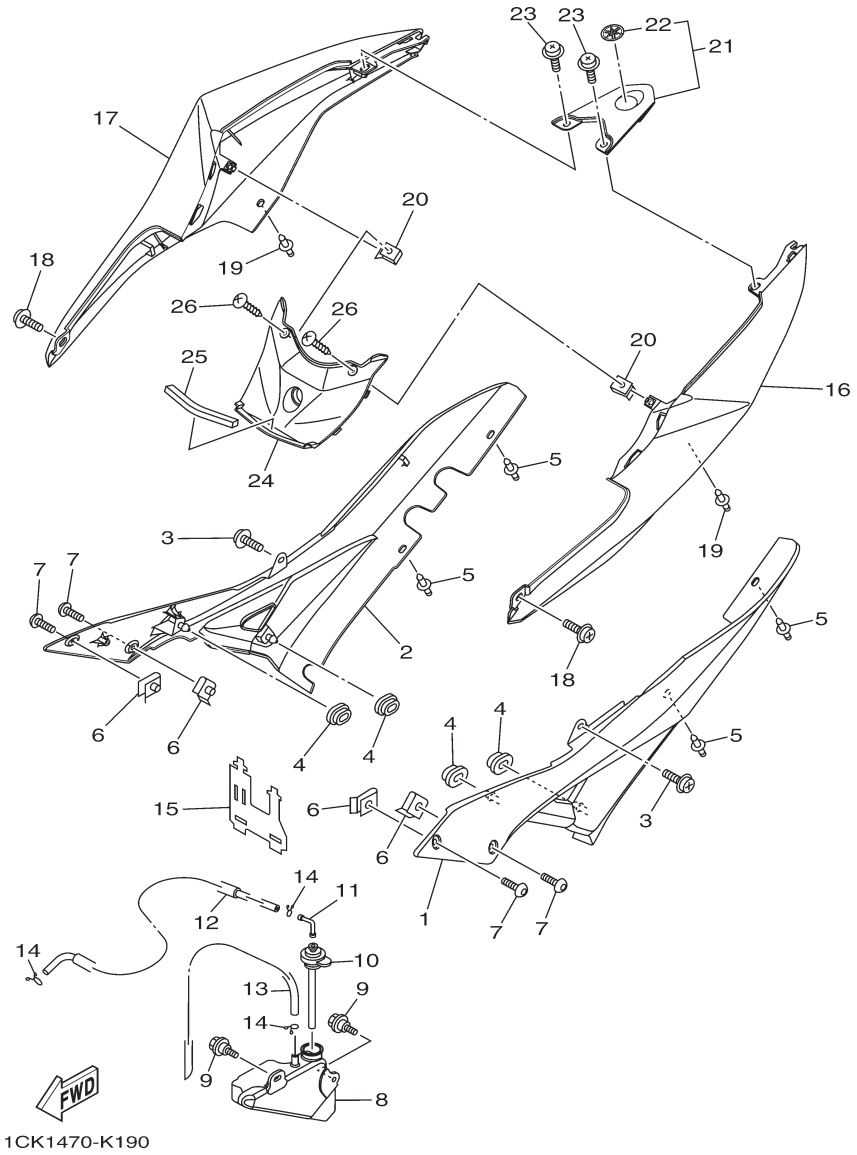

FIG. 19 (3U0) SIDE COVER

REF. NO.	PART NO.	PART NAME	1CK1					REMARKS
1	1CK-F1711-00	COVER, SIDE 1	1					
2	1CK-F1721-00	COVER, SIDE 2	1					
3	90159-06181	SCREW, WITH WASHER	2					
4	90480-01558	GROMMET	4					
5	90269-06008	RIVET	4					
6	90183-05061	NUT, SPRING	4					
7	90111-05003	BOLT,HEX. SOCKET BUTTON	4					
8	20P-F1871-00	TANK, RECOVERY	1					
9	90109-06183	BOLT	2					
10	20P-F1875-00	CAP	1					
11	20P-F1828-00	ELBOW	1					
12	90445-08831	HOSE	1					
13	90445-08832	HOSE	1					
14	90467-08003	CLIP	3					
15	20P-F1823-00	CLAMP, HOSE	1					
16	1CK-XF173-00-P0	COVER, SIDE 3 -DPBMY	1					UR FOR DPBMY
	1CK-XF173-10-P1	COVER, SIDE 3 -DBNM8 FOR SMX	1					UR DBNM8 FOR SMX
	1CK-XF173-20-P2	COVER, SIDE 3 -BWC1 FOR VRC1	1					UR BWC1 FOR VRC1
17	1CK-XF174-00-P0	COVER, SIDE 4 -DPBMY	1					UR FOR DPBMY
	1CK-XF174-10-P1	COVER, SIDE 4 -DBNM8 FOR SMX	1					UR DBNM8 FOR SMX
	1CK-XF174-20-P2	COVER, SIDE 4 -BWC1 FOR VRC1	1					UR BWC1 FOR VRC1
18	90159-06181	SCREW, WITH WASHER	2					
19	90269-06008	RIVET	2					
20	90183-05818	NUT, SPRING	2					
21	1CK-XF17C-00-P0	COVER, SIDE 5 -DPBMY	1					UR FOR DPBMY
	1CK-XF17C-10-P1	COVER, SIDE 5 -DBNM8 FOR SMX	1					UR DBNM8 FOR SMX
	1CK-XF17C-20-P2	COVER, SIDE 5 -BWC1 FOR VRC1	1					UR BWC1 FOR VRC1
22	20P-F836B-00	.TUNING FORK MARK	1					
23	90159-06181	SCREW, WITH WASHER	2					

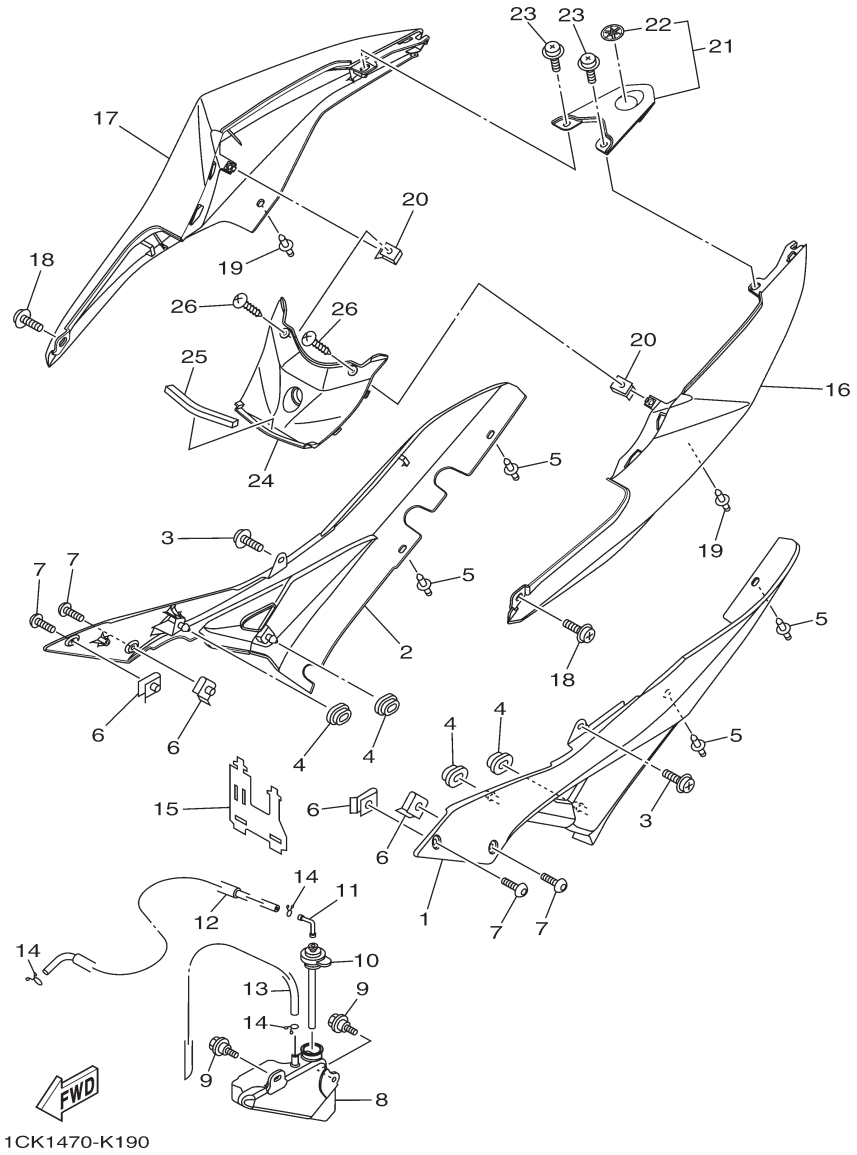

FIG. 19 (3U0) SIDE COVER

REF. NO.	PART NO.	PART NAME	1CK1					REMARKS
24	1CK-F171X-00-P0	COVER, SIDE 6 -DPBMY	1					FOR DPBMY
	1CK-F171X-00-P1	COVER, SIDE 6 -DBNM8 FOR SMX	1					DBNM8 FOR SMX
	1CK-F171X-00-P2	COVER, SIDE 6 -BWC1 FOR VRC1	1					BWC1 FOR VRC1
25	90520-08801	DAMPER, PLATE	1					
26	97707-50012	SCREW, TRUSS HEAD TAPPING	2					

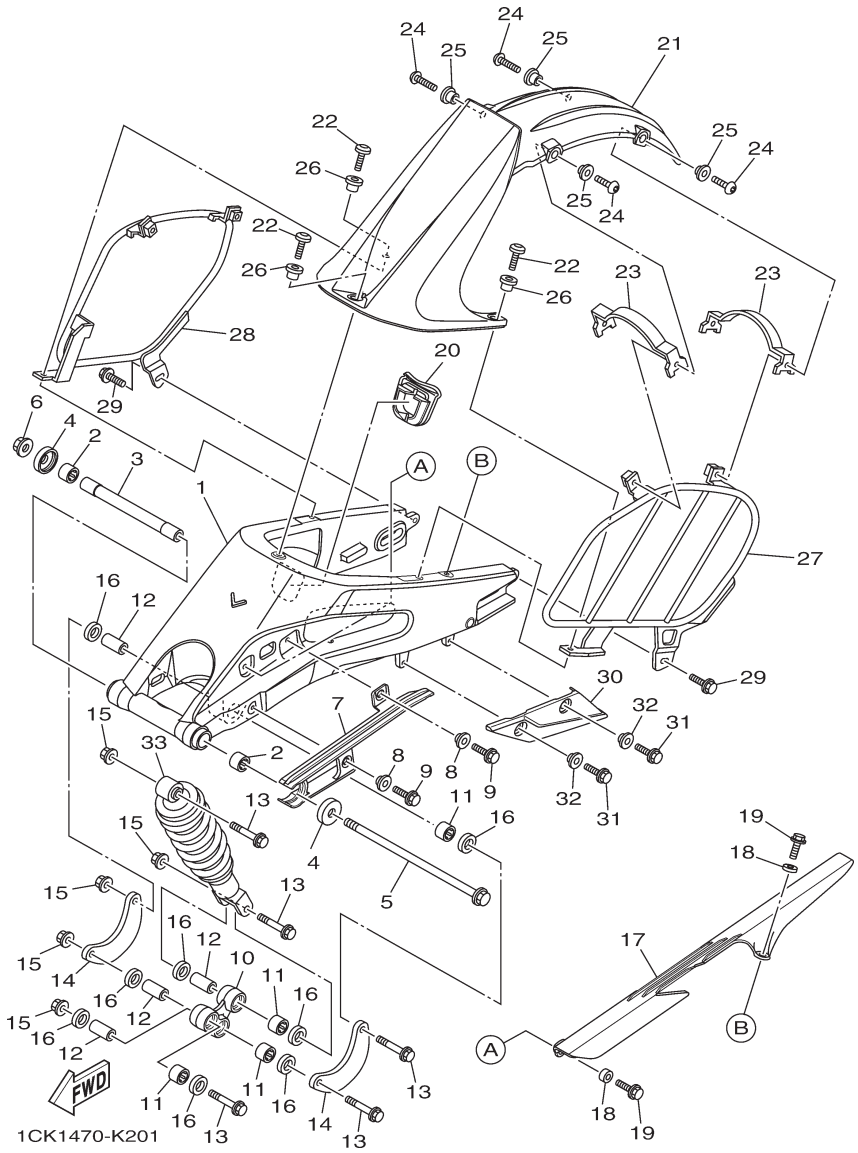

FIG. 20 (4A0) REAR ARM & SUSPENSION

REF. NO.	PART NO.	PART NAME	1CK1					REMARKS
1	1CK-F2110-00	REAR ARM COMP.	1					
2	93317-318Y5	BEARING	2					
3	20P-F2184-00	BUSH	1					
4	1CK-F2128-00	COVER, THRUST 1	2					
5	20P-F2141-00	SHAFT, PIVOT	1					
6	95707-12500	NUT, FLANGE	1					
7	1CK-F2151-00	SEAL, GUARD	1					
8	90387-07819	COLLAR	2					
9	95827-06014	BOLT, FLANGE	2					
10	1CK-F217A-00	ARM, RELAY	1					
11	93315-31758	BEARING	4					
12	90387-10814	COLLAR	4					
13	90105-10311	BOLT, FLANGE	5					
14	1CK-F217F-00	ROD, CONNECTING 1	2					
15	90179-10813	NUT	5					
16	93106-17802	OIL SEAL	8					
17	1CK-F2311-00	CASE, CHAIN	1					
18	90387-068G0	COLLAR	2					
19	95827-06014	BOLT, FLANGE	2					
20	1CK-F219X-00	COVER	1					
21	1CK-F1650-00	REAR FENDER COMP.	1					
22	90111-06139	BOLT,HEX. SOCKET BUTTON	3					
23	1CK-F164F-00	STAY 1	2					
24	92017-06014	BOLT, BUTTON HEAD	4					
25	90387-07819	COLLAR	4					
26	90387-068H0	COLLAR	3					
27	1CK-F1644-00	STAY, REAR	1					
28	1CK-F1645-00	STAY, REAR	1					

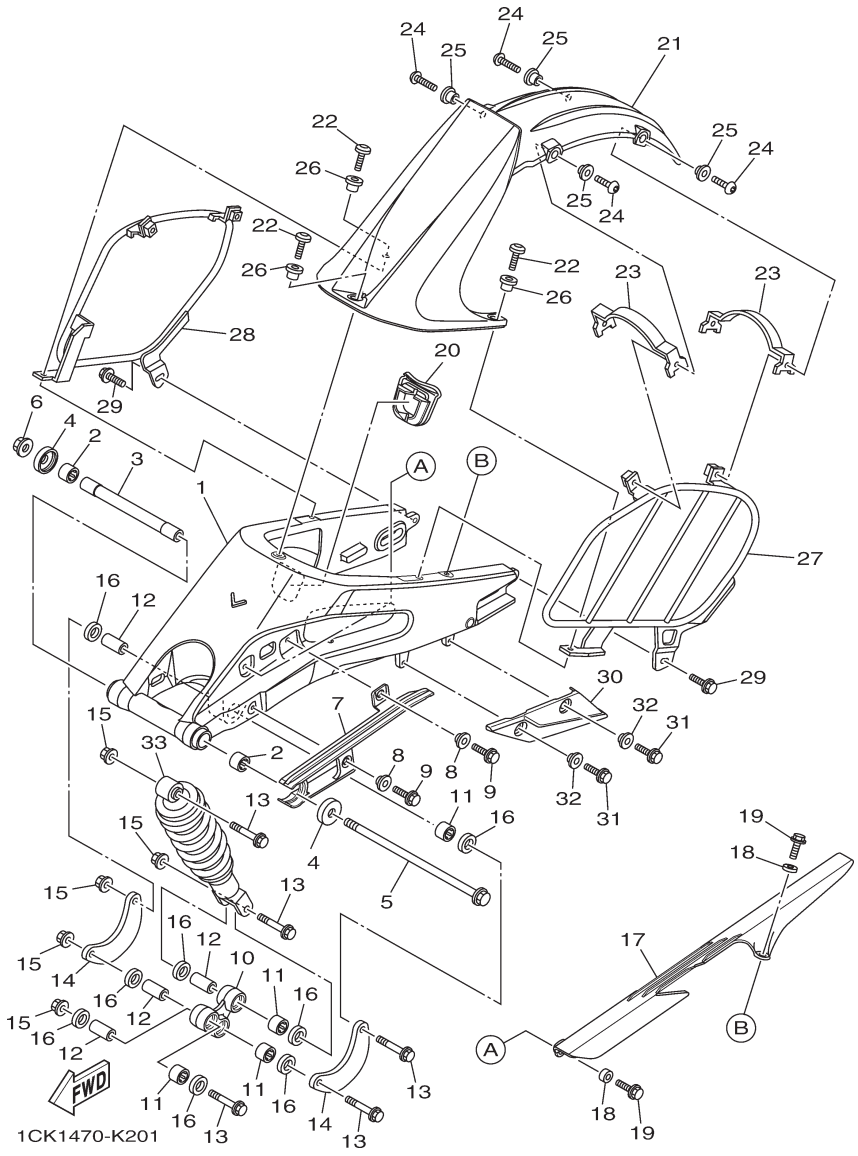

FIG. 20 (4A0) REAR ARM & SUSPENSION

REF. NO.	PART NO.	PART NAME	1CK1					REMARKS
29	95827-06012	BOLT, FLANGE	2					
30	1CK-F2147-00	PROTECTOR, CHAIN	1					
31	95827-06014	BOLT, FLANGE	2					
32	90387-07819	COLLAR	2					
33	1CK-F2210-00	SHOCK ABSORBER ASSY, REAR	1					

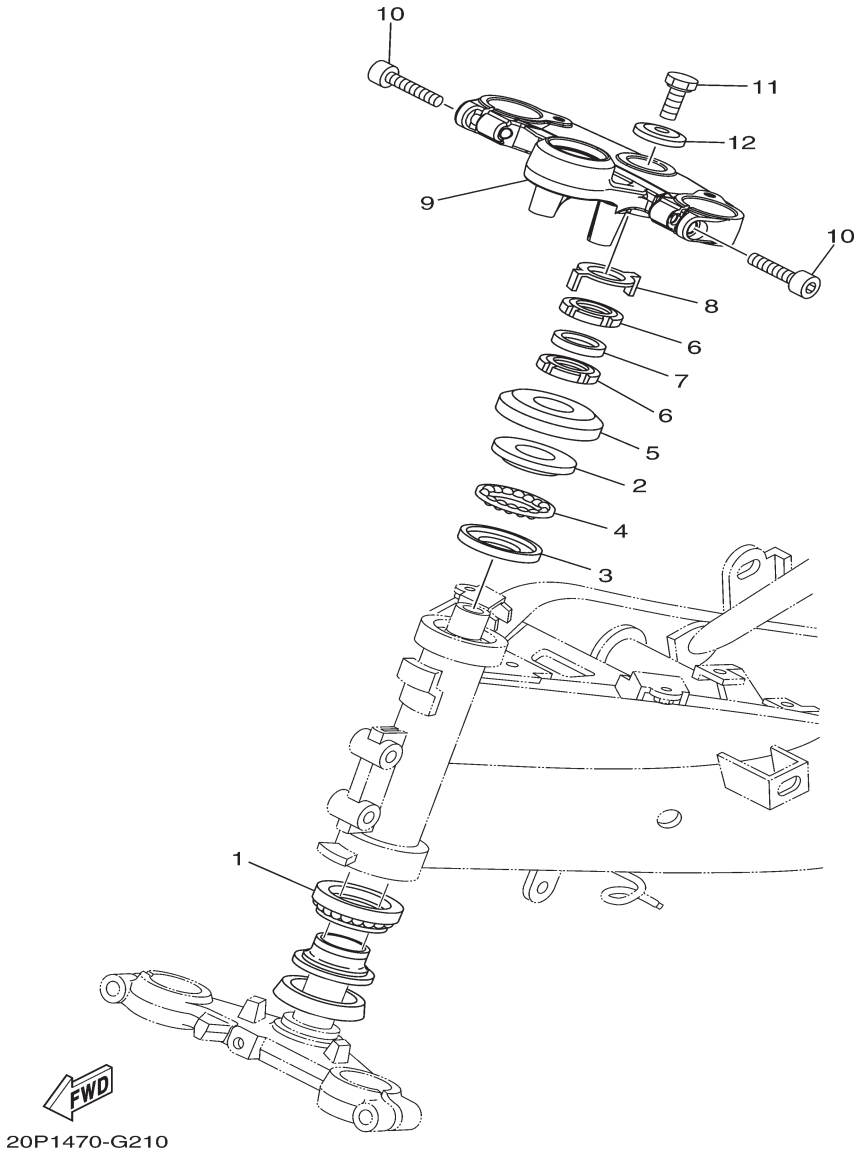

FIG. 21 (4H0) STEERING

REF. NO.	PART NO.	PART NAME	1CK1					REMARKS
1	5BP-F3873-01	BEARING, STEERING UPPER	1					
2	183-23411-00	RACE, BALL 1	1					
3	183-23412-00	RACE, BALL 2	1					
4	5TL-2341E-00	RETAINER, BALL BEARING (16)	1					
5	20P-F3416-00	COVER, BALL RACE 2	1					
6	90179-25615	NUT	2					
7	90202-26142	WASHER, PLATE	1					
8	20P-F3418-00	WASHER, SPECIAL	1					
9	20P-F3435-00	CROWN, HANDLE	1					
10	91317-08030	BOLT	2					
11	90105-10006	BOLT, FLANGE	1					
12	90209-10020	WASHER	1					

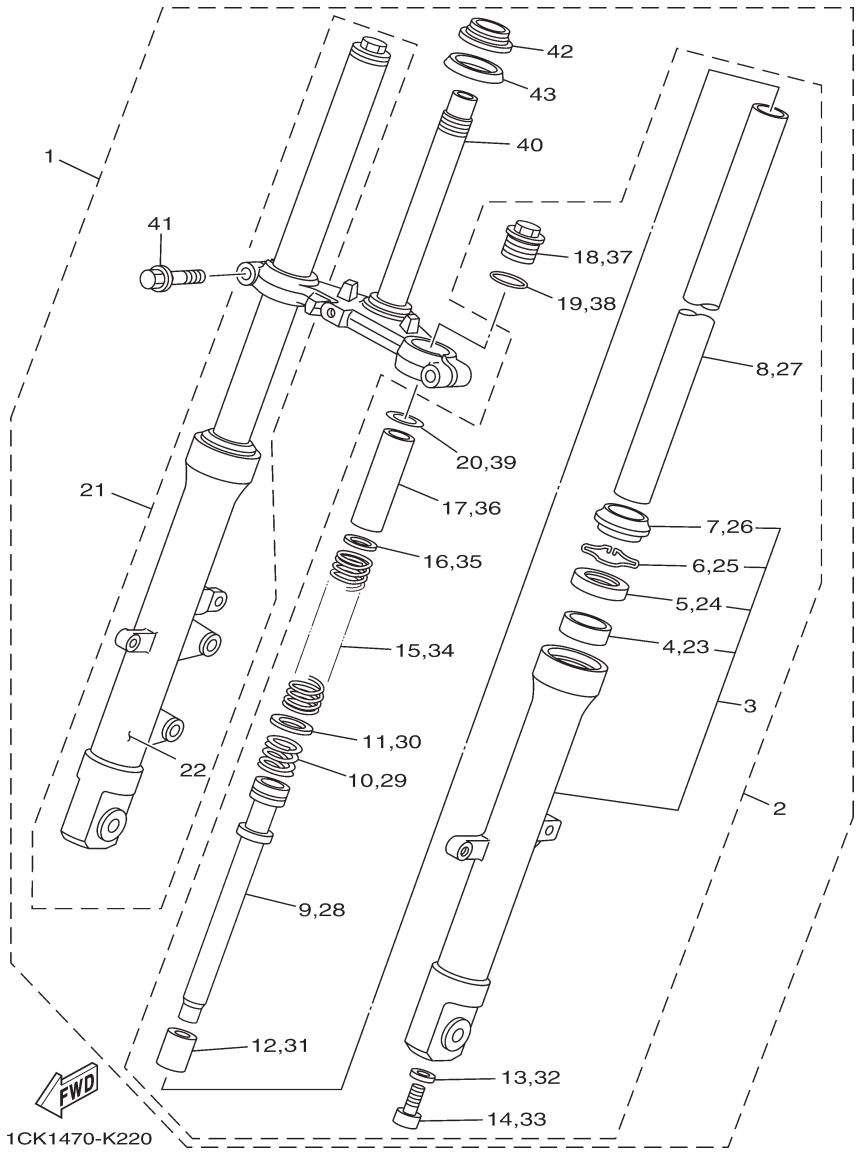

FIG. 22 (4K0) FRONT FORK

REF. NO.	PART NO.	PART NAME	1CK1					REMARKS
1	1CK-F3100-00	FRONT FORK ASSY	1					
2	1CK-F3102-00	.FRONT FORK ASSY (L.H)	1					
3	1CK-F3126-00	..TUBE, OUTER (LEFT)	1					
4	20P-F3125-00	...METAL, SLIDE 1	1					
5	20P-F3145-00	...OIL SEAL	1					
6	20P-F3156-00	...RING, SNAP	1					
7	20P-F3144-00	..SEAL, DUST	1					
8	20P-F3110-00	..INNER TUBE COMP.1	1					
9	20P-F3170-00	..CYLINDER COMP., FRONT FORK	1					
10	20P-F3151-00	..SPRING, REBOUND	1					
11	20P-F3157-00	..RING, PISTON	1					
12	20P-F3173-00	..SPINDLE, TAPER	1					
13	21C-F3158-00	..GASKET	1					
14	21C-F3181-00	.BOLT, HEXAGON SOCKET HEAD	1					
15	20P-F3141-00	..SPRING, FRONT FORK	1					
16	20P-F3149-00	..WASHER, SPRING UPPER	1					
17	20P-F3118-00	..SPACER	1					
18	20P-F3111-00	..BOLT, CAP	1					
19	20P-F3114-00	..GASKET	1					
20	1CK-F3738-00	..WASHER 2	1					
21	1CK-F3103-00	.FRONT FORK ASSY (R.H)	1					
22	1CK-F3136-00	..TUBE, OUTER (RIGHT)	1					
23	20P-F3125-00	...METAL, SLIDE 1	1					
24	20P-F3145-00	...OIL SEAL	1					
25	20P-F3156-00	...RING, SNAP	1					
26	20P-F3144-00	..SEAL, DUST	1					
27	20P-F3110-00	..INNER TUBE COMP.1	1					
28	20P-F3170-00	..CYLINDER COMP., FRONT FORK	1					
29	20P-F3151-00	..SPRING, REBOUND	1					
30	20P-F3157-00	..RING, PISTON	1					

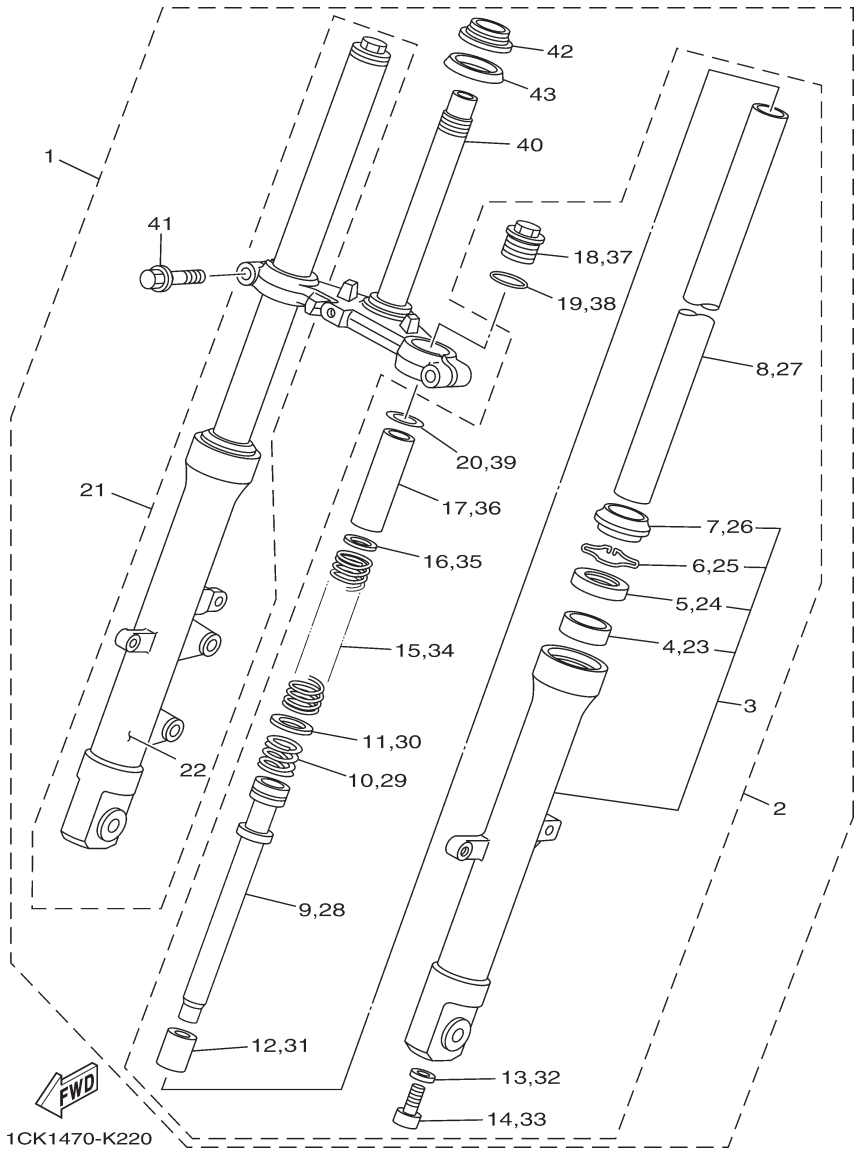

FIG. 22 (4K0) FRONT FORK

REF. NO.	PART NO.	PART NAME	1CK1					REMARKS
31	20P-F3173-00	..SPINDLE, TAPER	1					
32	21C-F3158-00	..GASKET	1					
33	21C-F3181-00	.BOLT, HEXAGON SOCKET HEAD	1					
34	20P-F3141-00	..SPRING, FRONT FORK	1					
35	20P-F3149-00	..WASHER, SPRING UPPER	1					
36	20P-F3118-00	..SPACER	1					
37	20P-F3111-00	..BOLT, CAP	1					
38	20P-F3114-00	..GASKET	1					
39	1CK-F3738-00	..WASHER 2	1					
40	20P-F3340-00	.UNDER BRACKET COMP.	1					
41	20P-F3346-00	.BOLT 1	2					
42	5BP-F3875-00	.BEARING, STEERING LOWER	1					
43	5YY-F3462-00	.SEAL, DUST	1					

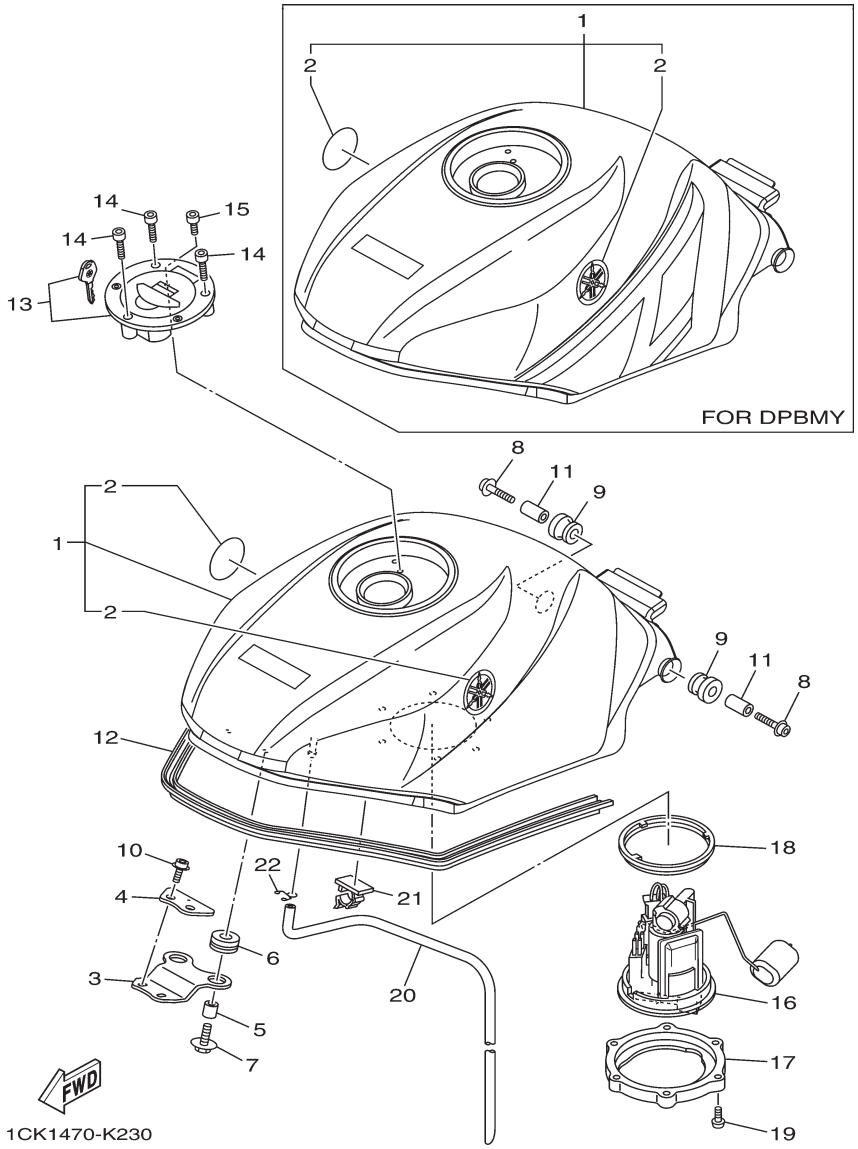

FIG. 23 (4S0) FUEL TANK

REF. NO.	PART NO.	PART NAME	1CK1					REMARKS
1	1CK-XF41A-00-P0	FUEL TANK COMP. -DPBMY	1					UR FOR DPBMY
	1CK-XF41A-10-P1	FUEL TANK COMP. -SMX	1					UR FOR SMX
	1CK-XF41A-20-P4	FUEL TANK COMP. -VRC1	1					UR FOR VRC1
2	5YY-F413B-00	.EMBLEM	2					
3	20P-F4191-00	BRACKET, FUEL TANK 1	1					
4	20P-F411F-00	PLATE, FITTING	1					
5	90387-06892	COLLAR	2					
6	90480-15483	GROMMET	2					
7	90119-06234	BOLT, WITH WASHER	2					
8	90110-06287	BOLT, HEXAGON SOCKET HEAD	2					
9	90480-18549	GROMMET	2					
10	90110-06215	BOLT, HEXAGON SOCKET HEAD	2					
11	90387-06890	COLLAR	2					
12	20P-F4188-00	MOLD, FUEL TANK	1					
13	54D-WF461-00	CAP ASSY WITH LOCK	1					
14	90110-05806	BOLT, HEXAGON SOCKET HEAD	3					
15	91317-05010	BOLT	1					
16	3C1-E3907-10	FUEL PUMP COMP.	1					
17	38B-F4491-00	BRACKET, FUEL PUMP	1					
18	20P-F4486-00	O-RING	1					
19	92012-05016	BOLT, BUTTON HEAD	6					
20	20P-F4312-00	PIPE 2	1					
21	90464-25160	CLAMP	1					
22	90467-09006	CLIP	1					

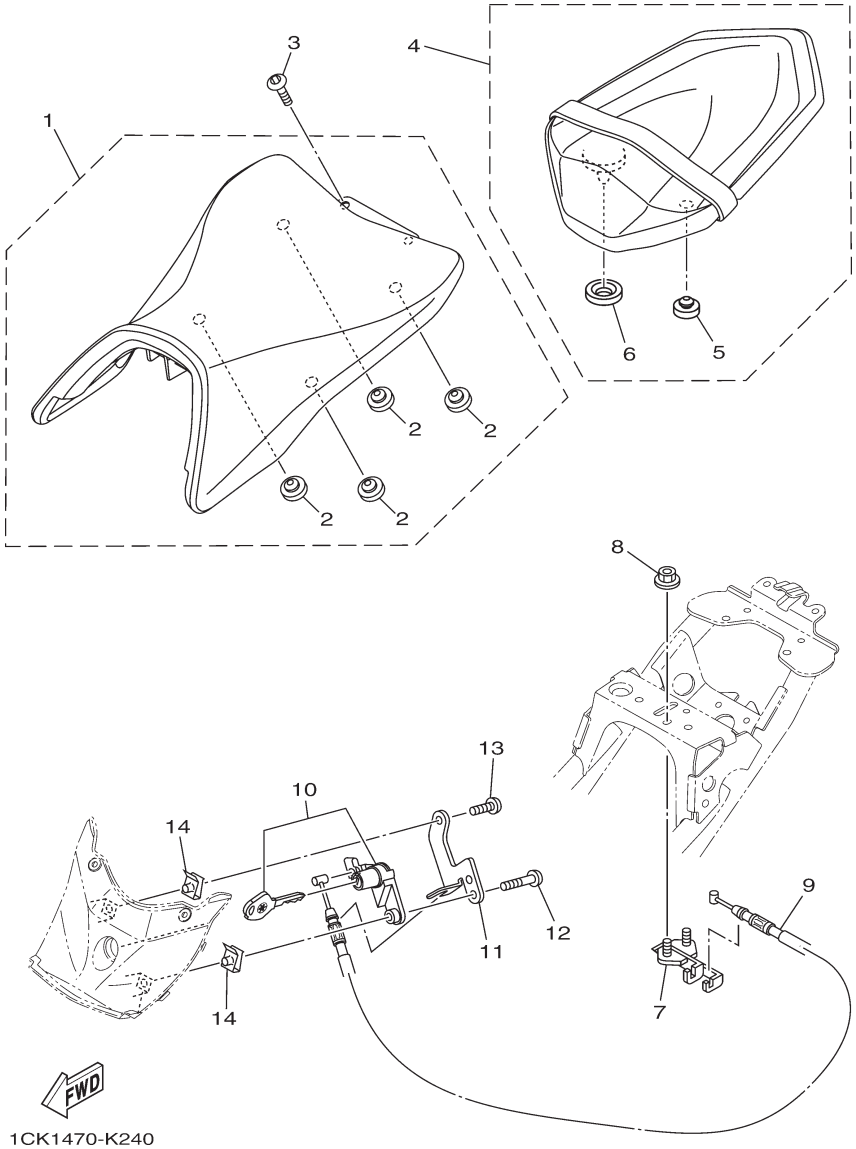

FIG. 24 (4U0) SEAT

REF. NO.	PART NO.	PART NAME	1CK1					REMARKS
1	1CK-F4710-00	SINGLE SEAT ASSY	1					
2	20P-F4741-00	.PAD, SEAT	4					
3	92012-08012	BOLT, BUTTON HEAD	2					
4	1CK-F4750-00	TANDEM SEAT ASSY	1					
5	4LS-F4741-00	.PAD, SEAT	1					
6	21C-F4763-00	.PAD, SEAT 2	1					
7	20P-F4780-00	SEAT LOCK ASSY	1					
8	95707-06500	NUT, FLANGE	2					
9	1CK-F478E-00	CABLE, SEAT LOCK	1					
10	1CK-WF47E-00	SEAT LOCK ASSY	1					
11	1CK-F117K-00	STAY, LOCK	1					
12	98507-05020	SCREW, PAN HEAD	1					
13	98507-05012	SCREW, PAN HEAD	1					
14	90183-05076	NUT,SPRING	2					

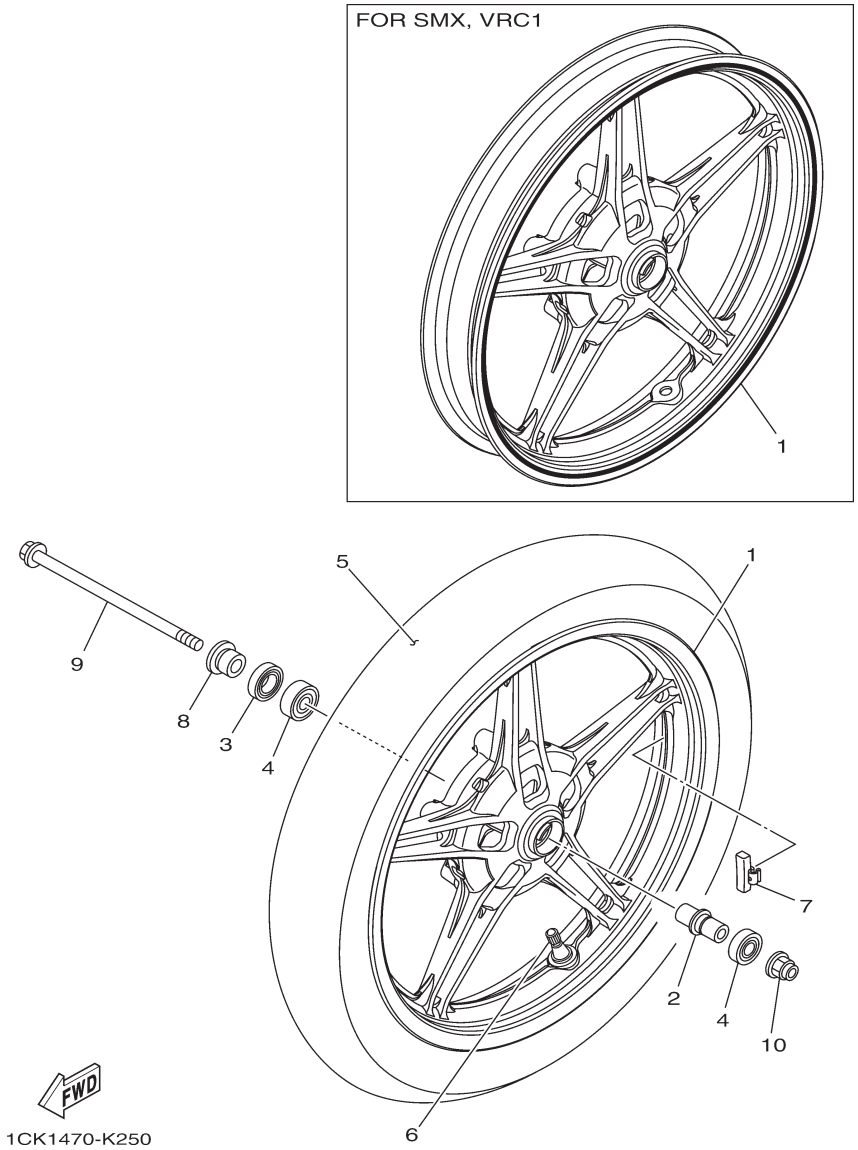

FIG. 25 (4W0) FRONT WHEEL

REF. NO.	PART NO.	PART NAME	1CK1					REMARKS
1	1CK-F5168-00	CAST WHEEL, FRONT	1					UR FOR DPBMY
	1CK-XF516-00	CAST WHEEL, FRONT	1					UR FOR SMX
	1CK-XF516-10	CAST WHEEL, FRONT	1					UR FOR VRC1
2	1CK-F510C-00	COLLAR ASSY.	1					
3	93106-22808	OIL SEAL	1					
4	93306-252YH	BEARING	2					
5	94109-17803	TIRE (90/90-21 M/C 54S)	1					
6	93900-00824	VALVE, RIM TR413	1					
7	5MT-25398-00	BALANCER, WHEEL (10G)	1					UN
	5MT-25398-10	BALANCER, WHEEL (20G)	1					UN
	5MT-25398-20	BALANCER, WHEEL (30G)	1					UN
8	1CK-F5186-00	COLLAR, WHEEL	1					
9	1CK-F5181-00	AXLE, WHEEL	1					
10	95602-14200	NUT, SELF-LOCKING	1					

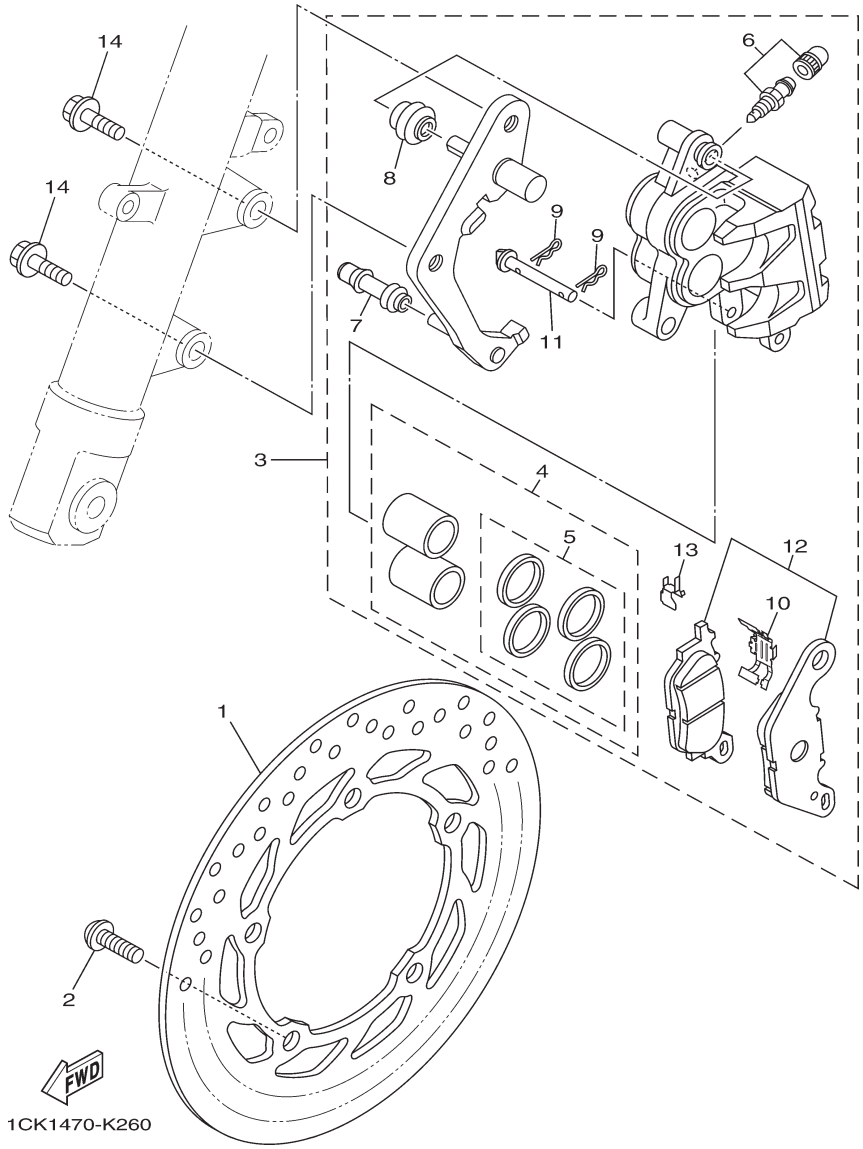

FIG. 26 (4X0) FRONT BRAKE CALIPER

REF. NO.	PART NO.	PART NAME	1CK1					REMARKS
1	1CK-F582U-00	DISK, BRAKE (RIGHT)	1					
2	90111-08847	BOLT,HEX. SOCKET BUTTON	5					
3	1CK-F580U-00	CALIPER ASSY (RIGHT)	1					
4	3C1-W0057-00	.PISTON ASSY, CALIPER	1					
5	3C1-W0047-00	..CALIPER SEAL KIT	1					
6	4C9-W0048-00	.BLEED SCREW KIT	1					
7	5YP-F5937-00	.BOOT 2	1					
8	5YP-F5917-00	.BOOT, CALIPER	1					
9	5YP-F5925-01	.CLIP	1					
10	5P0-F5919-00	.SUPPORT, PAD	1					
11	5YP-F5924-00	.PIN, PAD	1					
12	3C1-W0045-10	.BRAKE PAD KIT	1					
13	5YP-F5939-00	.CLIP, PAD	1					
14	90105-10082	BOLT, FLANGE	2					

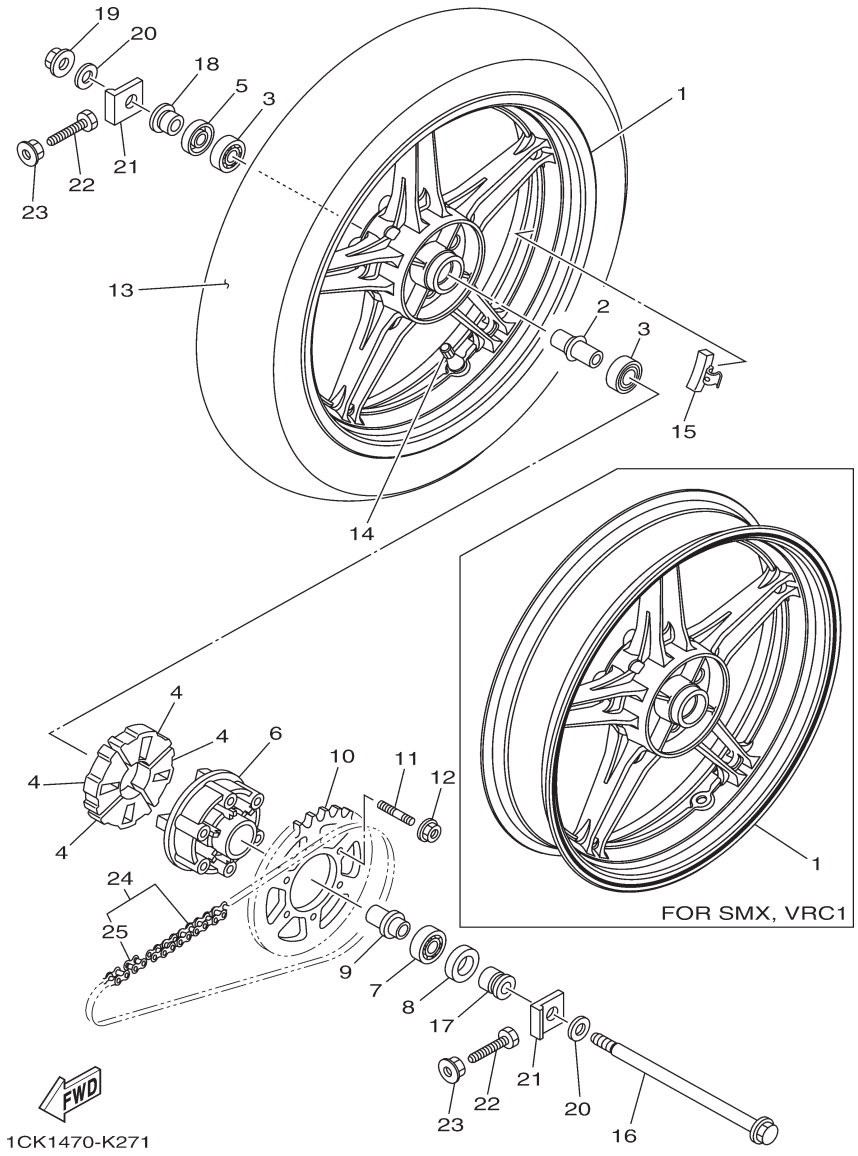

FIG. 27 (4Y0) REAR WHEEL

REF. NO.	PART NO.	PART NAME	1CK1					REMARKS
1	1CK-F5338-00	CAST WHEEL, REAR -DPBMY	1					UR FOR DPBMY
	1CK-XF533-00	CAST WHEEL, REAR -SMX	1					UR FOR SMX
	1CK-XF533-10	CAST WHEEL, REAR -VRC1	1					UR FOR VRC1
2	1CK-F530S-00	COLLAR ASSY	1					
3	93306-252YH	BEARING	2					
4	54B-F5364-00	DAMPER	4					
5	93106-22808	OIL SEAL	1					
6	20P-F5366-00-33	CLUTCH, HUB	1					YB
7	93306-054Y5	BEARING	1					
8	93106-26801	OIL SEAL	1					
9	1CK-F5377-00	COLLAR, WHEEL	1					
10	1CK-F5447-00	SPROCKET, DRIVEN (47T)	1					
11	90116-08834	BOLT, STUD	6					
12	95602-08200	NUT, SELF-LOCKING	6					
13	94113-17806	TIRE	1					
14	93900-00824	VALVE, RIM TR413	1					
15	5MT-25398-00	BALANCER, WHEEL (10G)	1					UN
	5MT-25398-10	BALANCER, WHEEL (20G)	1					UN
	5MT-25398-20	BALANCER, WHEEL (30G)	1					UN
16	1CK-F5381-00	AXLE, WHEEL	1					
17	1CK-F5386-00	COLLAR, SPROCKET AXLE	1					
18	1CK-F5383-00	COLLAR, WHEEL	1					
19	95602-14200	NUT, SELF-LOCKING	1					
20	90201-15837	WASHER, PLATE	2					
21	1CK-F5388-00	PULLER, CHAIN 1	2					
22	90101-08006	BOLT	2					
23	95702-08500	NUT, FLANGE	2					
24	94568-E5131	CHAIN	1					
25	94668-E5021	.JOINT, CHAIN	1					

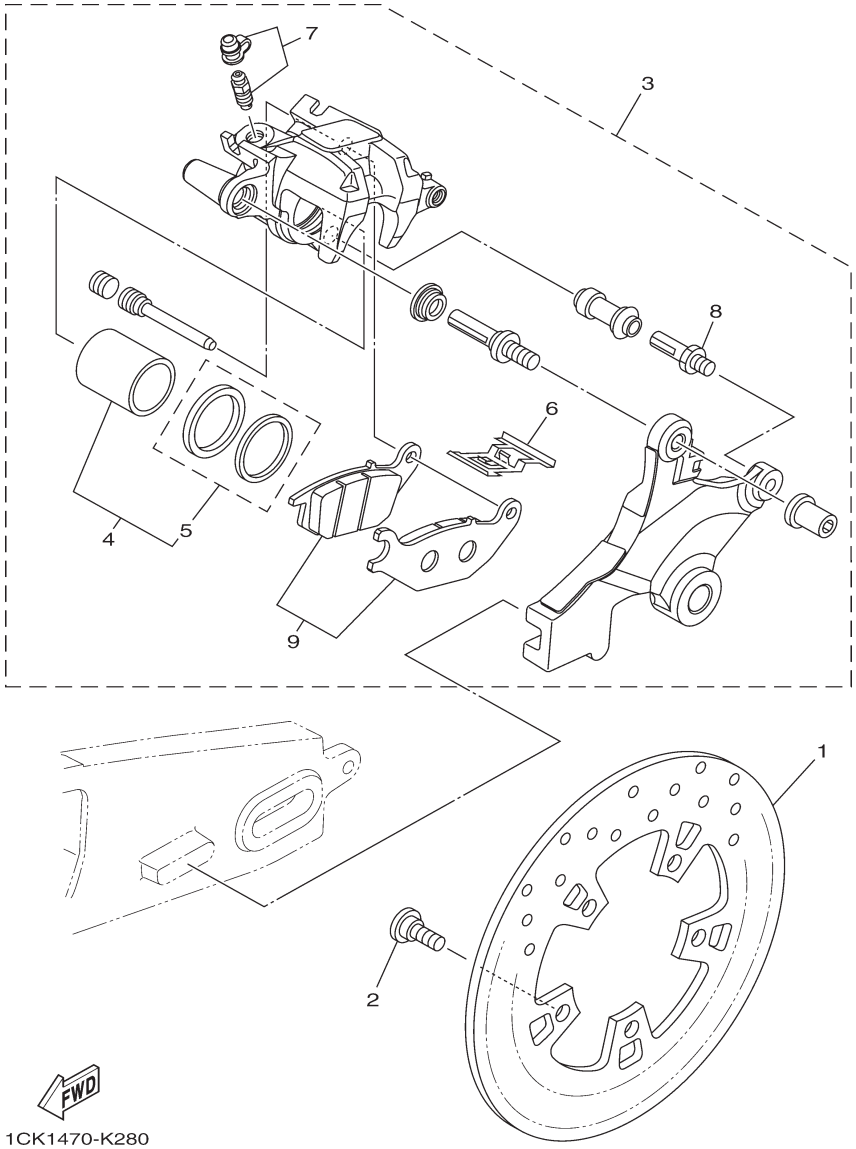

FIG. 28 (4Z0) REAR BRAKE CALIPER

REF. NO.	PART NO.	PART NAME	1CK1					REMARKS
1	1CK-F582W-00	DISK, REAR BRAKE 2	1					
2	90109-08015	BOLT	5					
3	1CK-F580W-00	CALIPER ASSY, REAR 2	1					UR
	2PB-F580W-00	CALIPER ASSY, REAR 2	1					UR
4	4S3-W0057-00	.PISTON ASSY, CALIPER	1					
5	3GD-W0047-00	..CALIPER SEAL KIT	1					
6	4S3-F5919-00	.SUPPORT, PAD	1					
7	4S3-W0048-00	.BLEED SCREW KIT	1					
8	3SP-F5914-51	.PIN, SLIDE	1					
9	20P-W0046-00	.BRAKE PAD KIT 2	1					UR
	4S3-W0045-00	.BRAKE PAD KIT 2	1					UR

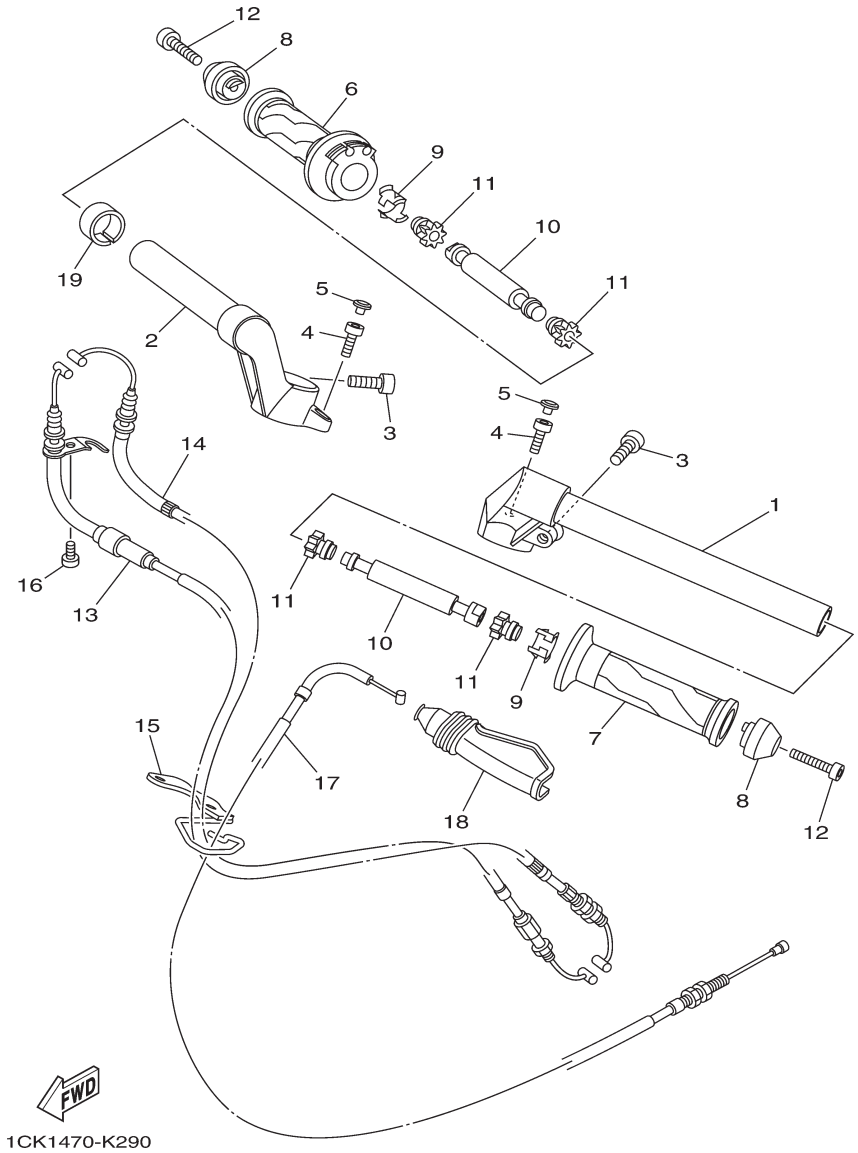

FIG. 29 (5B0) STEERING HANDLE & CABLE

REF. NO.	PART NO.	PART NAME	1CK1					REMARKS
1	20P-F6121-00	HANDLEBAR (LEFT)	1					
2	20P-F6122-00	HANDLEBAR (RIGHT)	1					
3	91317-08025	BOLT	2					
4	91317-06020	BOLT	2					
5	20P-F3469-00	CAP, BOLT	2					
6	1CK-F6240-00	GRIP ASSY	1					
7	20P-F6241-00	GRIP	1					
8	20P-F6246-00	END, GRIP	2					
9	20P-F6257-00	STOPPER	2					
10	20P-F622H-00	WEIGHT	2					
11	20P-F622F-00	DAMPER, LOCATING 1	4					
12	91317-06030	BOLT	2					
13	1CK-F6311-00	CABLE, THROTTLE 1	1					
14	1CK-F6312-00	CABLE, THROTTLE 2	1					
15	20P-F6315-00	GUIDE, WIRE	1					
16	98507-05012	SCREW, PAN HEAD	1					
17	20P-F6335-00	CABLE, CLUTCH	1					
18	20P-F6372-00	COVER, HANDLE LEVER 1	1					
19	90387-22591	COLLAR	1					

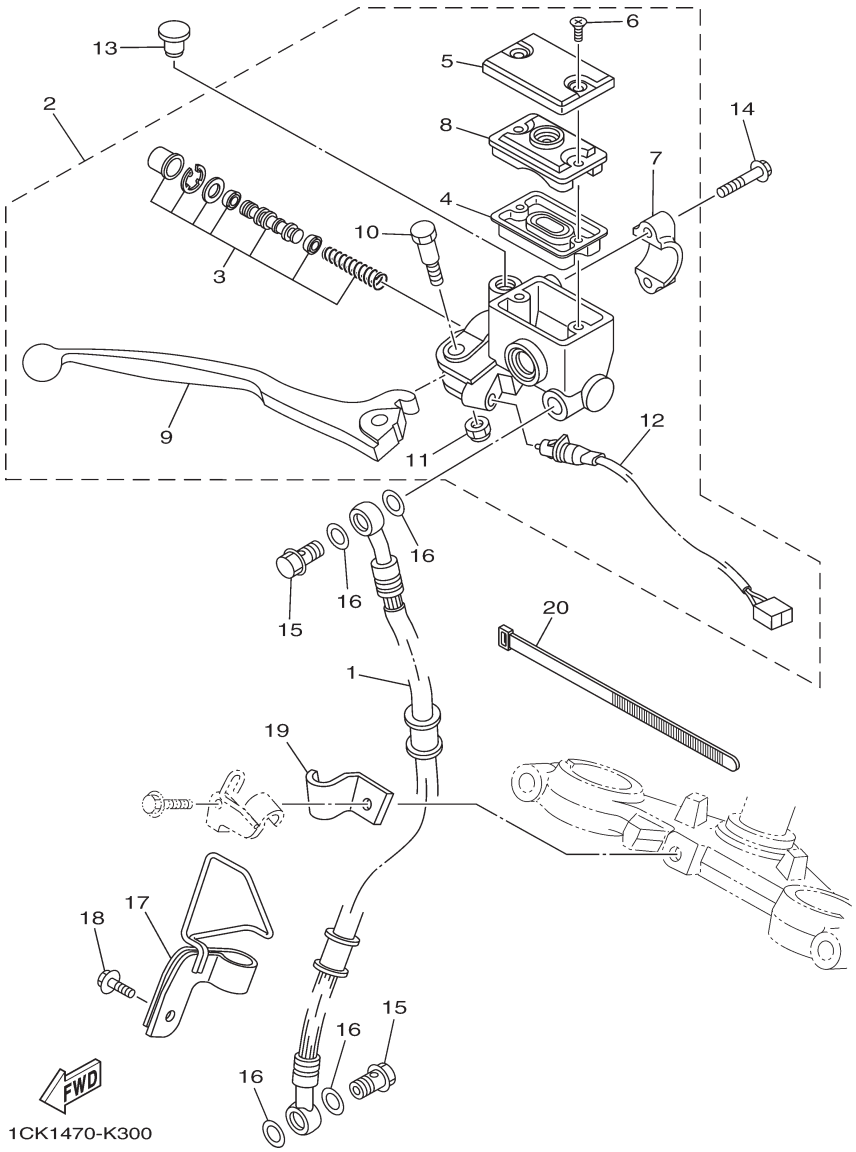

FIG. 30 (5C0) FRONT MASTER CYLINDER

REF. NO.	PART NO.	PART NAME	1CK1					REMARKS
1	20P-F5872-00	HOSE, BRAKE 1	1					
2	1CK-F583T-00	MASTER CYLINDER ASSY	1					
3	5P0-W0041-10	.CYLINDER KIT, MASTER	1					
4	3RW-F5854-00	.DIAPHRAGM, RESERVOIR	1					
5	3C1-F5852-00	.CAP, RESERVOIR	1					
6	36Y-2589H-00	.SCREW	2					
7	3RW-F5867-00	.BRACKET, MASTER CYLINDER	1					
8	3C1-F5855-00	.BUSH,DIAPHRAGM	1					
9	38B-H3922-00	.LEVER 2	1					
10	90109-06577	.BOLT	1					
11	95602-06100	.NUT, U	1					
12	1CK-H3980-00	.FRONT STOP SWITCH ASSY	1					
13	90338-09802	PLUG	1					
14	95027-06025	BOLT, FLANGE	2					
15	90401-10820	BOLT, UNION	2					
16	90201-10118	WASHER, PLATE	4					
17	1CK-F5886-00	HOLDER, BRAKE HOSE	1					
18	95027-06014	BOLT, FLANGE	1					
19	20P-F5876-00	HOLDER, BRAKE HOSE 2	1					
20	437-83936-11	BAND, SWITCH CORD	1					

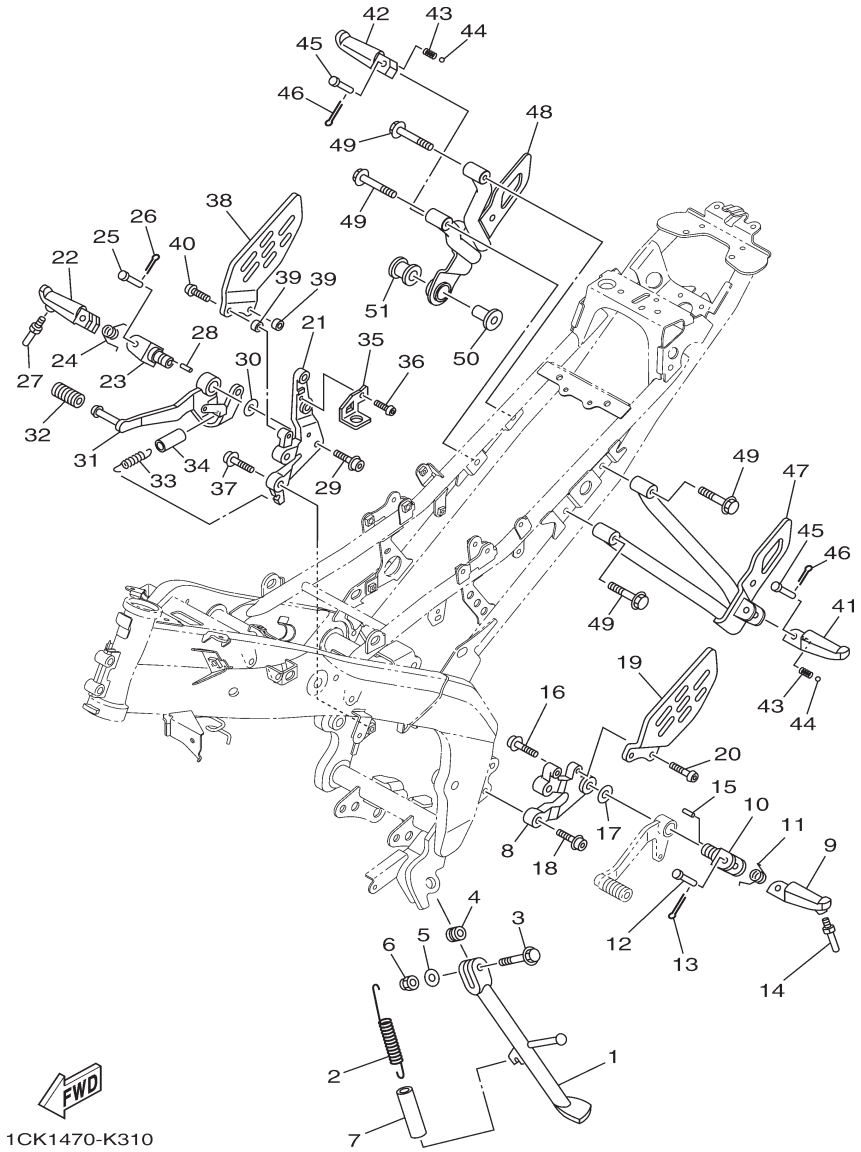

FIG. 31 (5F0) STAND & FOOTREST

REF. NO.	PART NO.	PART NAME	1CK1					REMARKS
1	20P-F7311-00	STAND, SIDE	1					
2	90506-28800	SPRING, TENSION	1					
3	90105-106A7	BOLT, FLANGE	1					
4	90387-10003	COLLAR	1					
5	92907-10600	WASHER, PLATE	1					
6	95617-10100	NUT, U	1					
7	90445-21848	HOSE (L70)	1					
8	20P-F7442-00	BRACKET 2	1					
9	20P-F7451-00	FOOTREST	1					
10	20P-F7411-00	FOOTREST 1	1					
11	90508-183B9	SPRING, TORSION	1					
12	90240-08800	PIN, CLEVIS	1					
13	91401-20012	PIN, COTTER	1					
14	20P-F7435-00	BOLT	1					
15	90249-02002	PIN	1					
16	90110-10012	BOLT, HEXAGON SOCKET HEAD	1					
17	90201-10066	WASHER, PLATE	1					
18	90110-08814	BOLT, HEXAGON SOCKET HEAD	2					
19	20P-F7445-00	PLATE 1	1					
20	92012-06016	BOLT, BUTTON HEAD	2					
21	20P-F7443-00	BRACKET 3	1					
22	20P-F7461-00	FOOTREST	1					
23	20P-F7411-00	FOOTREST 1	1					
24	90508-184B0	SPRING, TORSION	1					
25	90240-08800	PIN, CLEVIS	1					
26	91401-20012	PIN, COTTER	1					
27	20P-F7435-00	BOLT	1					
28	90249-02002	PIN	1					
29	90110-10012	BOLT, HEXAGON SOCKET HEAD	1					
30	90201-10066	WASHER, PLATE	1					

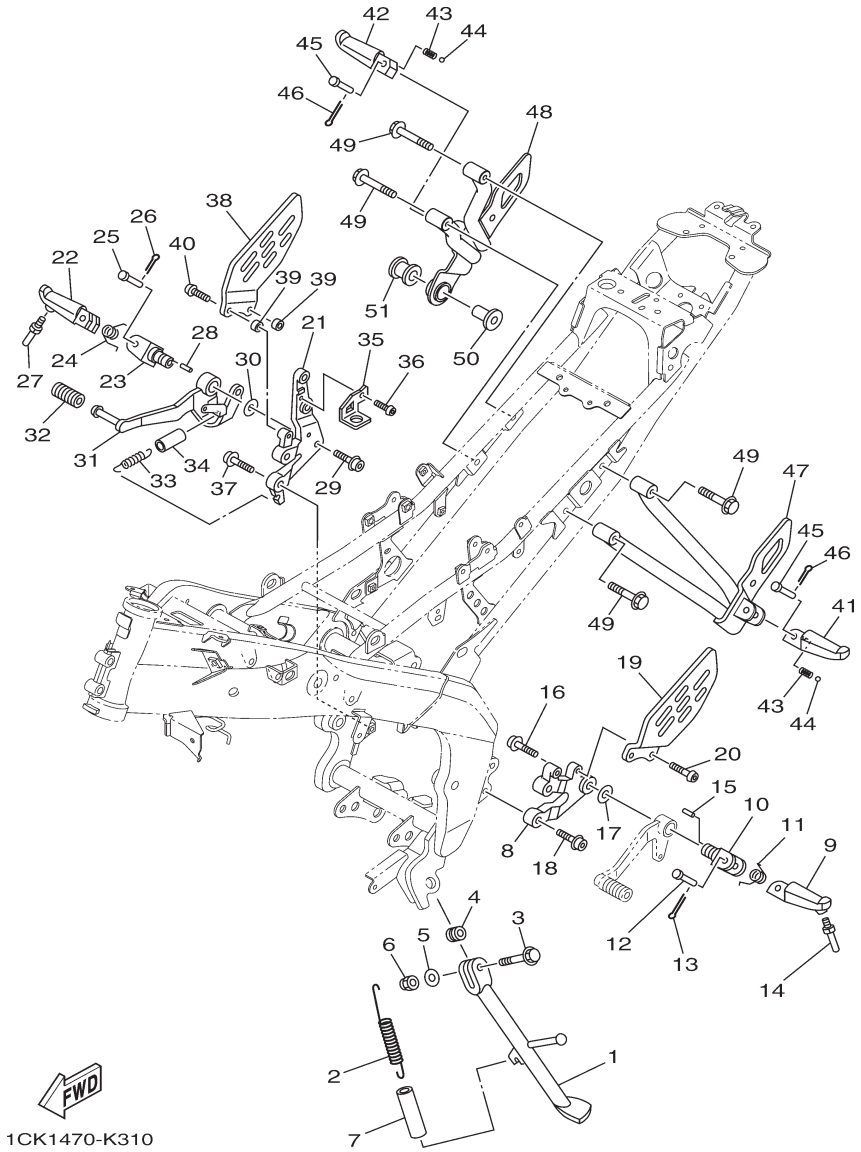

FIG. 31 (5F0) STAND & FOOTREST

REF. NO.	PART NO.	PART NAME	1CK1					REMARKS
31	1CK-F7211-00	PEDAL, BRAKE	1					
32	20P-E8113-00	COVER, SHIFT PEDAL	1					
33	90506-20193	SPRING, TENSION	1					
34	90445-16807	HOSE	1					
35	1CK-F144G-00	STAY, STOP SWITCH	1					
36	92012-06010	BOLT, BUTTON HEAD	1					
37	90110-08814	BOLT, HEXAGON SOCKET HEAD	2					
38	20P-F7446-01	PLATE 2	1					
39	90387-068H8	COLLAR	2					
40	92012-06020	BOLT, BUTTON HEAD	2					
41	20P-F7431-00	FOOTREST, REAR 1	1					
42	20P-F7441-00	FOOTREST, REAR 2	1					
43	90501-12743	SPRING, COMPRESSION	2					
44	93501-04805	BALL	2					
45	90240-08800	PIN, CLEVIS	2					
46	91401-20012	PIN, COTTER	2					
47	1CK-F741L-00	BRACKET 4	1					
48	1CK-F742L-00	BRACKET 5	1					
49	95817-08012	BOLT, FLANGE	4					
50	90387-08812	COLLAR	1					
51	20P-E4747-00	DAMPER, MUFFLER	1					

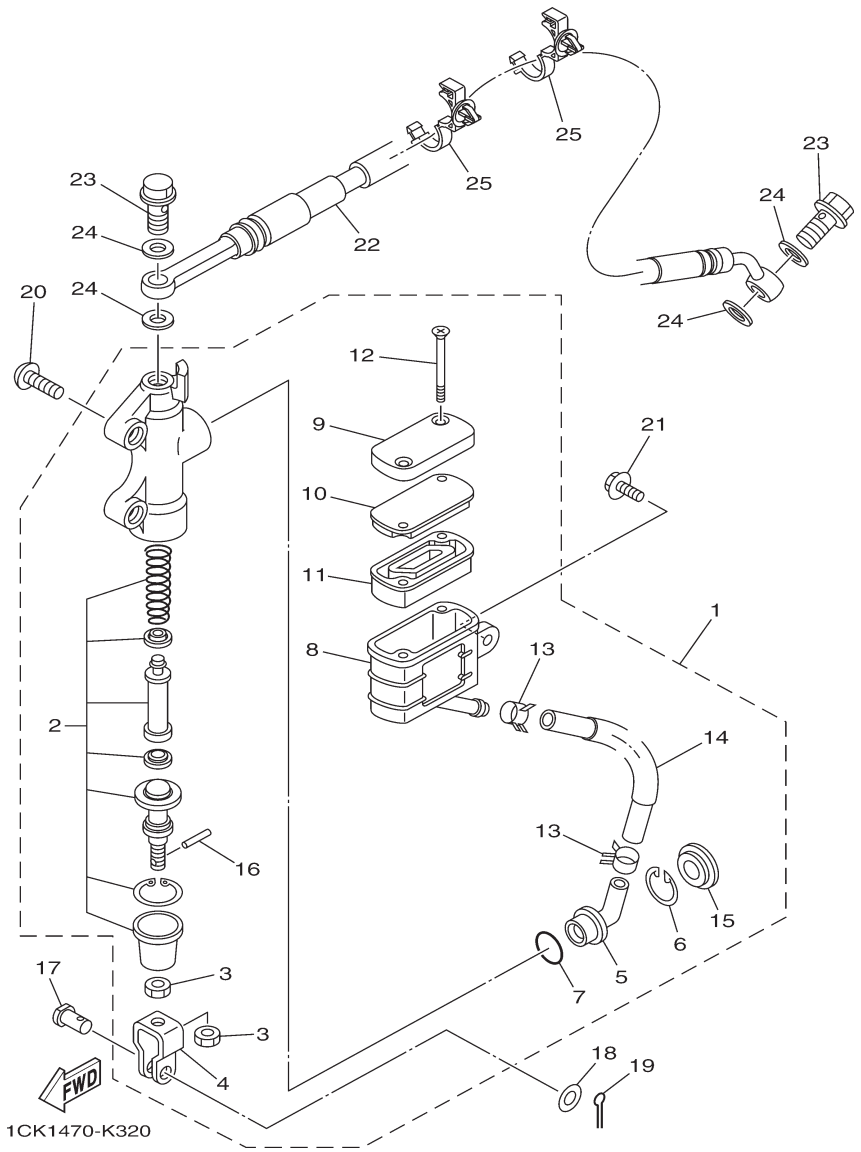

FIG. 32 (5G0) REAR MASTER CYLINDER

REF. NO.	PART NO.	PART NAME	1CK1					REMARKS
1	1CK-F583V-00	RR. MASTER CYLINDER ASSY.	1					
2	20P-W0042-00	.CYLINDER KIT, MASTER	1					
3	95301-08700	.NUT	2					
4	2YK-F7222-00	.JOINT	1					
5	4ML-F582A-50	.JOINT	1					
6	2VN-F5866-00	.CIRCLIP	1					
7	93210-15620	.O-RING	1					
8	20P-F5894-00	.TANK, RESERVOIR	1					
9	54C-F5852-00	.CAP, RESERVOIR	1					
10	20P-F585B-00	.PLATE, DIAPHRAGM	1					
11	20P-F5854-00	.DIAPHRAGM, RESERVOIR	1					
12	98707-04045	.SCREW, FLAT HEAD	2					
13	90467-12085	.CLIP	2					
14	1CK-F5895-00	.HOSE, RESERVOIR	1					
15	3FV-F589A-00	.COVER, DUST	1					
16	4TT-F7238-00	.PIN	1					
17	90240-08124	PIN, CLEVIS	1					
18	90201-08083	WASHER, PLATE	1					
19	91401-20012	PIN, COTTER	1					
20	92012-08020	BOLT, BUTTON HEAD	2					
21	90119-06044	BOLT, WITH WASHER	1					
22	1CK-25873-00	HOSE, BRAKE 2	1					
23	90401-10820	BOLT, UNION	2					
24	90201-10118	WASHER, PLATE	4					
25	90464-17003	CLAMP	2					

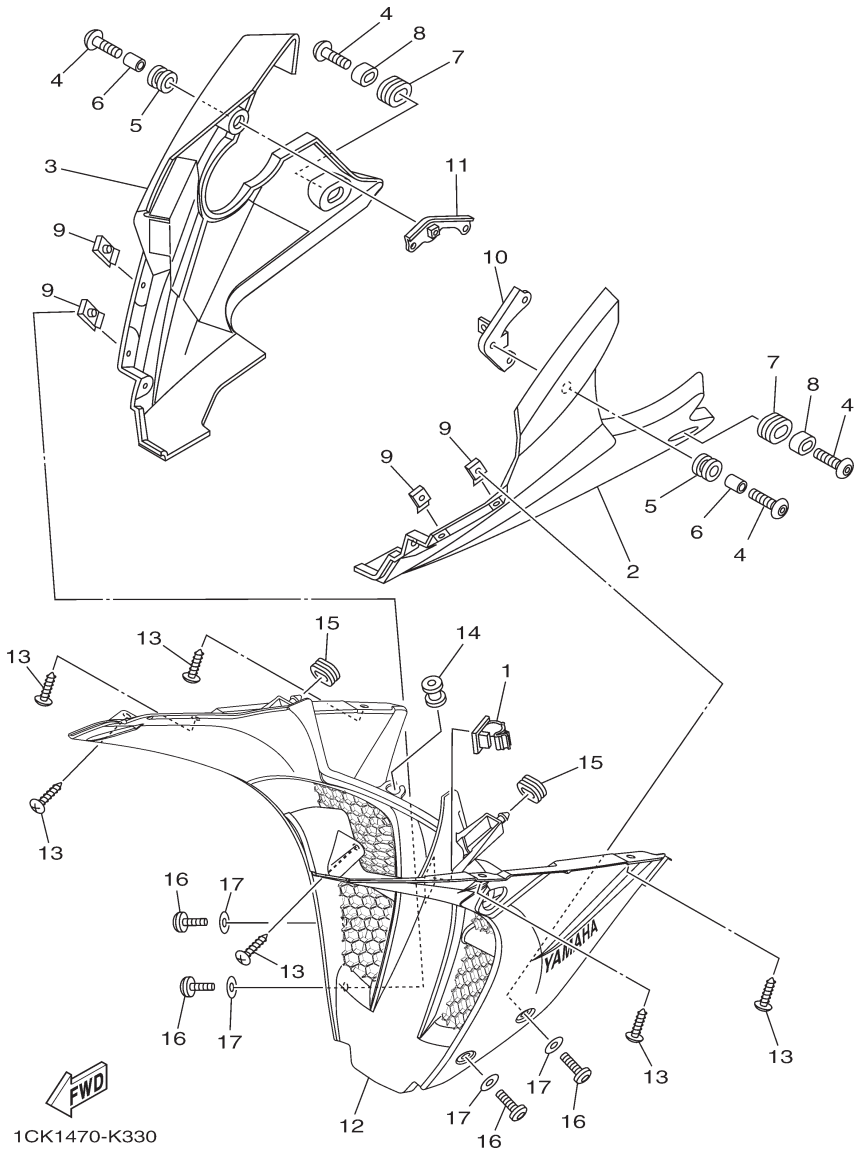

FIG. 33 (5M0) LEG SHIELD

REF. NO.	PART NO.	PART NAME	1CK1					REMARKS
1	90464-54086	CLAMP	1					
2	20P-F8385-10-P0	COVER, UNDER -SMX FOR DPBMY	1					SMX FOR DPBMY
	20P-F8385-10-P2	COVER, UNDER -DBNM8 FOR SMX	1					DBNM8 FOR SMX
	20P-F8385-10-P3	COVER, UNDER -BWC1 FOR VRC1	1					BWC1 FOR VRC1
3	20P-F8395-11-P0	COVER, UNDER 2 -SMX FOR DPBMY	1					SMX FOR DPBMY
	20P-F8395-11-P2	COVER, UNDER 2 -DBNM8 FOR SMX	1					DBNM8 FOR SMX
	20P-F8395-11-P3	COVER, UNDER 2 - BWC1 FOR VRC1	1					BWC1 FOR VRC1
4	90111-06117	BOLT,HEX. SOCKET BUTTON	4					
5	90480-14003	GROMMET	2					
6	90387-068C2	COLLAR	2					
7	90480-01811	GROMMET	2					
8	20P-F1749-00	COLLAR	2					
9	90183-05061	NUT, SPRING	4					
10	54C-F831U-00	STAY, SIDE 1	1					
11	20P-F832U-00	STAY, SIDE 1	1					
12	1CK-XF83D-00	PANEL, INNER 3 -DPBMY	1					UR FOR DPBMY
	1CK-XF83D-10-P0	PANEL, INNER 3 -DBNM8 FOR SMX	1					UR DBNM8 FOR SMX
	1CK-XF83D-30-1X	PANEL, INNER 3 -BWC1 FOR VRC1	1					UR BWC1 FOR VRC1
13	97707-50012	SCREW, TRUSS HEAD TAPPING	6					
14	20P-F1773-00	GROMMET	1					
15	90480-01559	GROMMET	2					
16	90111-05003	BOLT,HEX. SOCKET BUTTON	4					
17	90202-05180	WASHER, PLATE	4					

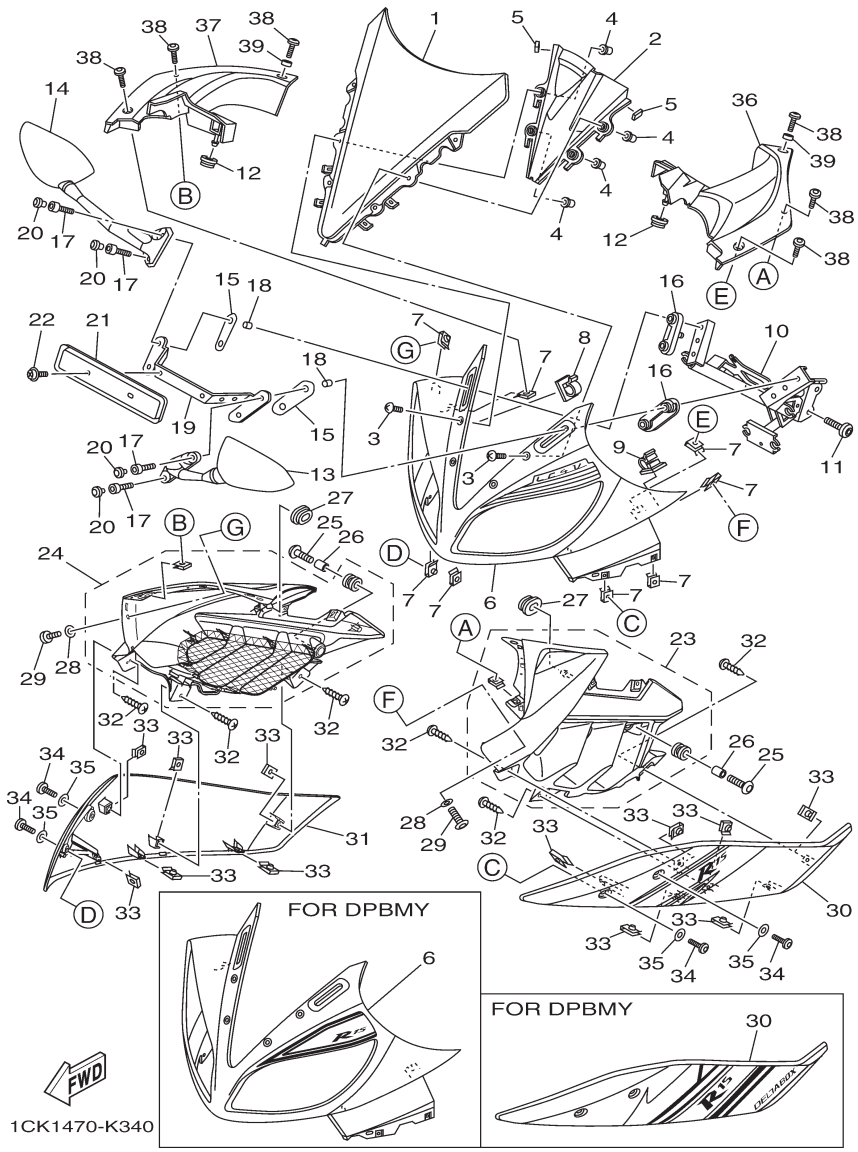

FIG. 34 (5M3) WINDSHIELD

REF. NO.	PART NO.	PART NAME	1CK1					REMARKS
1	1CK-F8381-00	WINDSHIELD	1					
2	20P-F836R-00	PANEL, INNER 5	1					
3	90150-05024	SCREW, ROUND HEAD	4					
4	90179-05523	NUT	4					
5	90520-02810	DAMPER, PLATE	2					
6	1CK-XF835-00-P0	PANEL ASSY -DPBMY	1					UR FOR DPBMY
	1CK-XF835-10-P1	PANEL ASSY -SMX	1					UR FOR SMX
	1CK-XF835-20-P4	PANEL ASSY -VRC1	1					UR FOR VRC1
7	90183-05061	NUT, SPRING	8					
8	90464-20021	CLAMP	1					
9	90464-54086	CLAMP	1					
10	20P-F8356-01	STAY 1	1					
11	90111-08836	BOLT,HEX. SOCKET BUTTON	2					
12	90480-01558	GROMMET	2					
13	20P-F6280-00	REAR VIEW MIRROR ASSY (LEFT)	1					
14	20P-F6290-00	REAR VIEW MIRROR ASSY (RIGHT)	1					
15	20P-F8483-00	PLATE, RUBBER 1	2					
16	20P-F8484-00	PLATE, RUBBER 2	2					
17	91317-06025	BOLT	4					
18	90387-068C2	COLLAR	4					
19	20P-F1685-00	BRACKET, LICENSE	1					
20	20P-F3469-00	CAP, BOLT	4					
21	5US-F3485-00	PLATE, NUMBER	1					
22	97607-05212	SCREW,WITH WASHER	2					
23	1CK-XF11E-00-P0	COVER 7 -DPBMY	1					UR FOR DPBMY
	1CK-XF11E-10-P1	COVER 7 -SMX	1					UR FOR SMX
	1CK-XF11E-20-P2	COVER 7 -VRC1	1					UR FOR VRC1
24	1CK-XF11F-00-P0	COVER 8 -DPBMY	1					UR FOR DPBMY
	1CK-XF11F-10-P1	COVER 8 -SMX	1					UR FOR SMX
	1CK-XF11F-20-P2	COVER 8 -VRC1	1					UR FOR VRC1

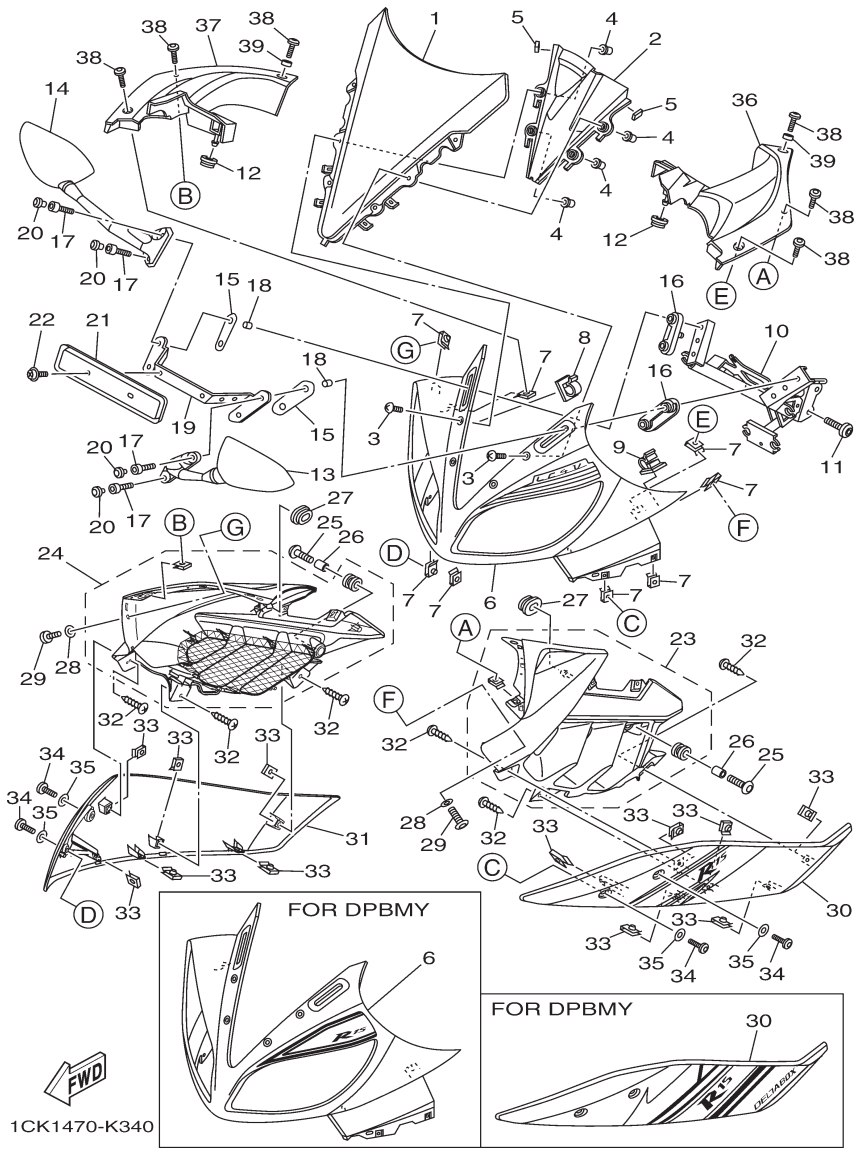

FIG. 34 (5M3) WINDSHIELD

REF. NO.	PART NO.	PART NAME	1CK1					REMARKS
25	90111-06117	BOLT,HEX. SOCKET BUTTON	2					
26	90387-068C2	COLLAR	2					
27	90480-01558	GROMMET	2					
28	90202-05180	WASHER, PLATE	2					
29	90111-05003	BOLT,HEX. SOCKET BUTTON	2					
30	1CK-XF836-00-P0	PANEL COMP 1 -DPBMY	1					UR FOR DPBMY
	1CK-XF836-10-P1	PANEL COMP 1 -SMX	1					UR FOR SMX
	1CK-XF836-20-P2	PANEL COMP 1 -VRC1	1					UR FOR VRC1
31	1CK-XF83G-00-P0	PANEL COMP 2 -DPBMY	1					UR FOR DPBMY
	1CK-XF83G-10-P1	PANEL COMP 2 -SMX	1					UR FOR SMX
31	1CK-XF83G-20-P2	PANEL COMP 2 -VRC1	1					UR FOR VRC1
32	97707-50012	SCREW, TRUSS HEAD TAPPING	6					
33	90183-05818	NUT, SPRING	12					
34	90111-05003	BOLT,HEX. SOCKET BUTTON	4					
35	90202-05180	WASHER, PLATE	4					
36	20P-F837L-00	PANEL, CONSOLE 1	1					
37	20P-F837M-00	PANEL, CONSOLE 2	1					
38	90111-05002	BOLT,HEX. SOCKET BUTTON	6					
39	90387-068C4	COLLAR	2					

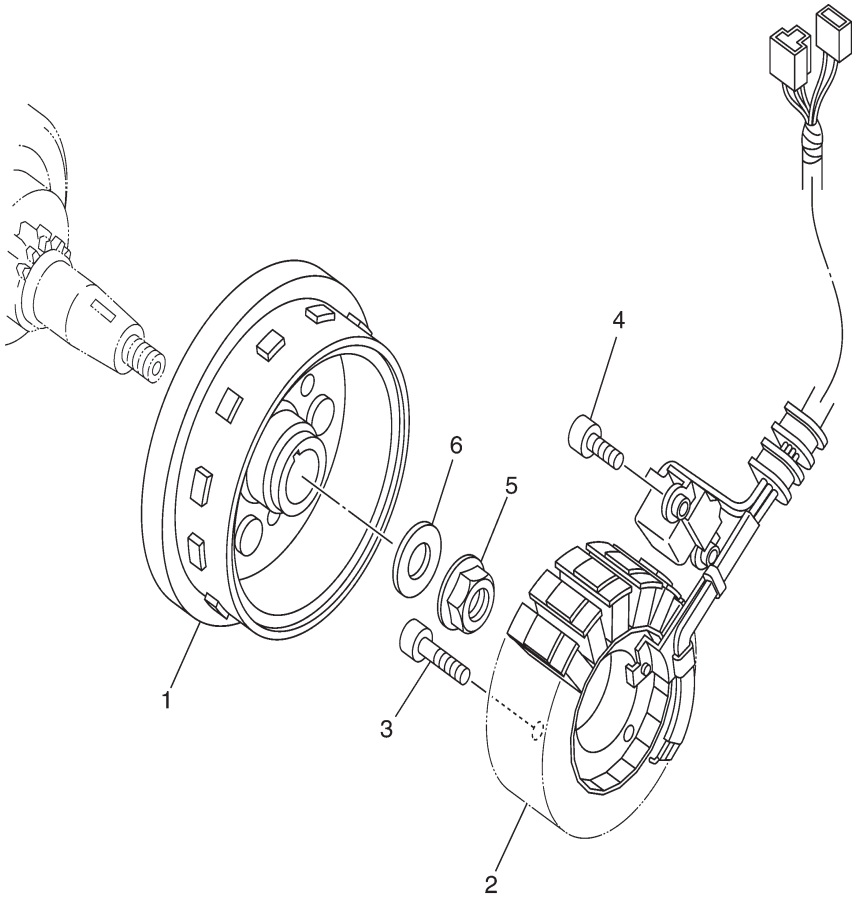

3C11460-F320

FIG. 35 (8A0) GENERATOR

REF. NO.	PART NO.	PART NAME	1CK1					REMARKS
1	3C1-H1450-10	ROTOR ASSY	1					
2	3C1-H1410-11	STATOR ASSY	1					
3	91317-06025	BOLT	3					
4	91317-06016	BOLT	2					
5	95707-12500	NUT, FLANGE	1					
6	90201-12019	WASHER, PLATE	1					

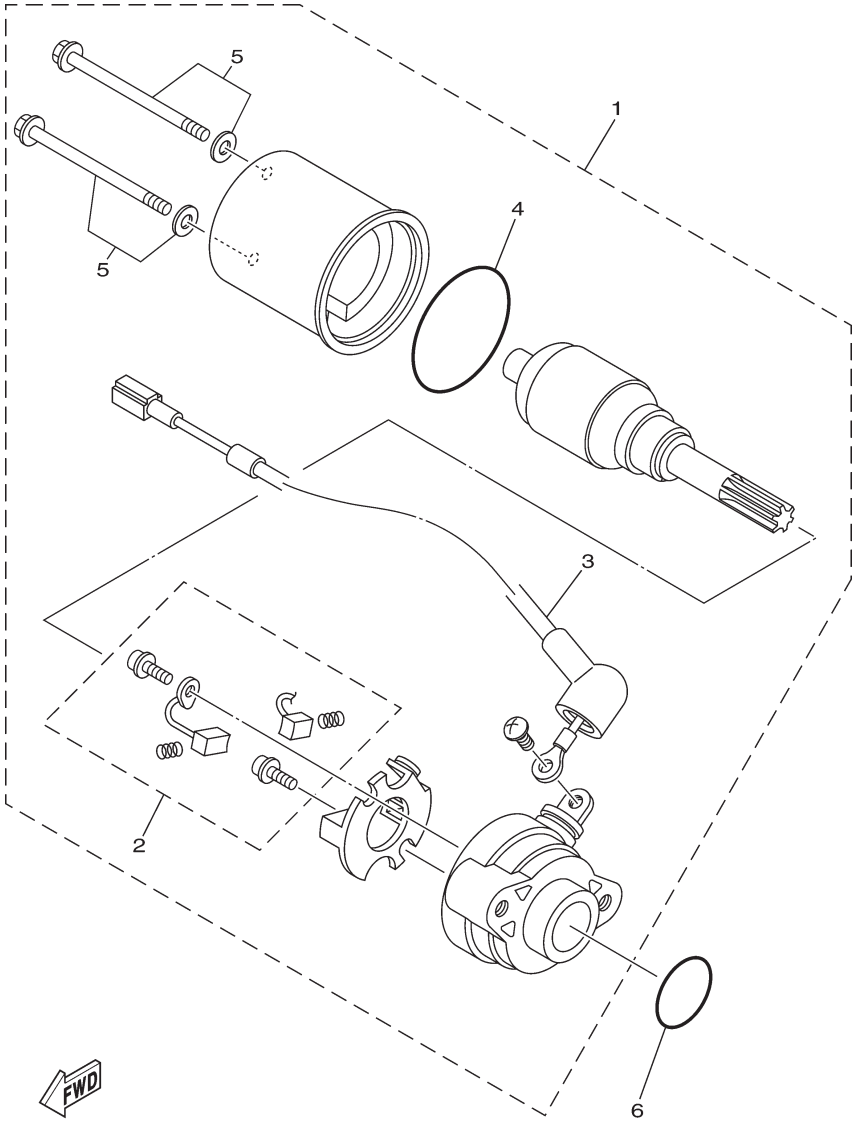

3C11460-F330

FIG. 36 (8C0) STARTING MOTOR

REF. NO.	PART NO.	PART NAME	1CK1					REMARKS
1	38B-H1800-01	STARTING MOTOR ASSY	1					
2	3AY-H1801-00	.BRUSH SET	1					
3	5D7-8183G-00	.CORD COMP.	1					
4	1S7-H1861-00	.GASKET	1					
5	3AY-H1828-00	.SCREW 2	1					
6	93210-26810	O-RING	1					

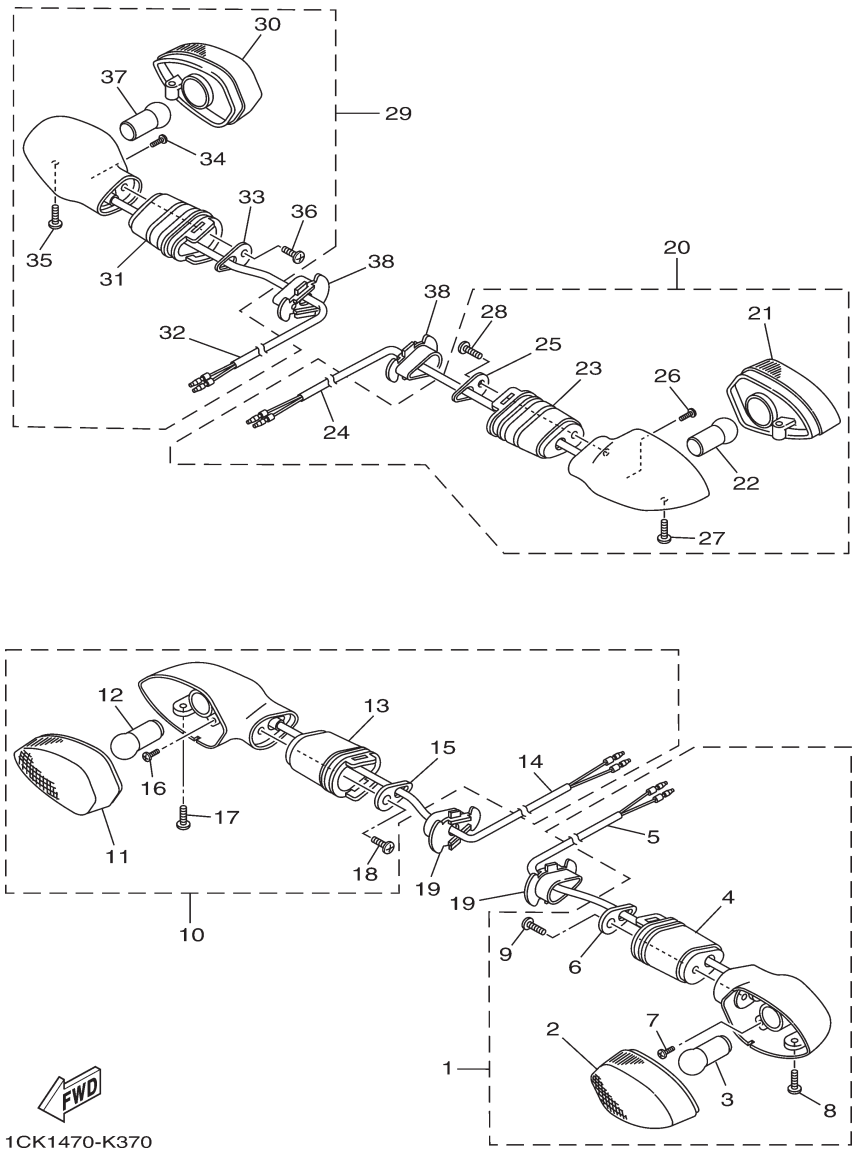

FIG. 37 (8F0) FLASHER LIGHT

REF. NO.	PART NO.	PART NAME	1CK1					REMARKS
1	1CK-H3310-00	FRONT FLASHER LIGHT ASSY 1	1					
2	54B-H331A-00	.LENS COMP 1	1					
3	20P-H3311-00	.BULB, FLASHER (12V-10W)	1					
4	20P-H3318-00	.STAY, FLASHER 1	1					
5	1CK-H331E-00	.CORD ASSY	1					
6	20P-H3618-00	.PLATE	1					
7	20P-H213A-00	.SCREW, FITTING	1					
8	20P-H3333-00	.SCREW, LENS FITTING	1					
9	20P-H2133-00	.SCREW, FITTING	1					
10	1CK-H3320-00	FRONT FLASHER LIGHT ASSY 2	1					
11	54B-H332A-00	.LENS COMP 2	1					
12	20P-H3311-00	.BULB, FLASHER (12V-10W)	1					
13	20P-H3318-00	.STAY, FLASHER 1	1					
14	1CK-H332E-00	.CORD ASSY	1					
15	20P-H3618-00	.PLATE	1					
16	20P-H213A-00	.SCREW, FITTING	1					
17	20P-H3333-00	.SCREW, LENS FITTING	1					
18	20P-H2133-00	.SCREW, FITTING	1					
19	5YY-H3318-10	STAY, FLASHER 1	2					
20	1CK-H3330-00	REAR FLASHER LIGHT ASSY 1	1					
21	54B-H334A-00	.LENS COMP 2	1					
22	20P-H3311-00	.BULB, FLASHER (12V-10W)	1					
23	20P-H3318-10	.STAY, FLASHER 1	1					
24	1CK-H333E-00	.CORD ASS'Y	1					
25	20P-H3618-00	.PLATE	1					
26	20P-H213A-00	.SCREW, FITTING	1					
27	20P-H3333-00	.SCREW, LENS FITTING	1					
28	20P-H2133-00	.SCREW, FITTING	1					
29	1CK-H3340-00	REAR FLASHER LIGHT ASSY 2	1					
30	54B-H333A-00	.LENS COMP 1	1					

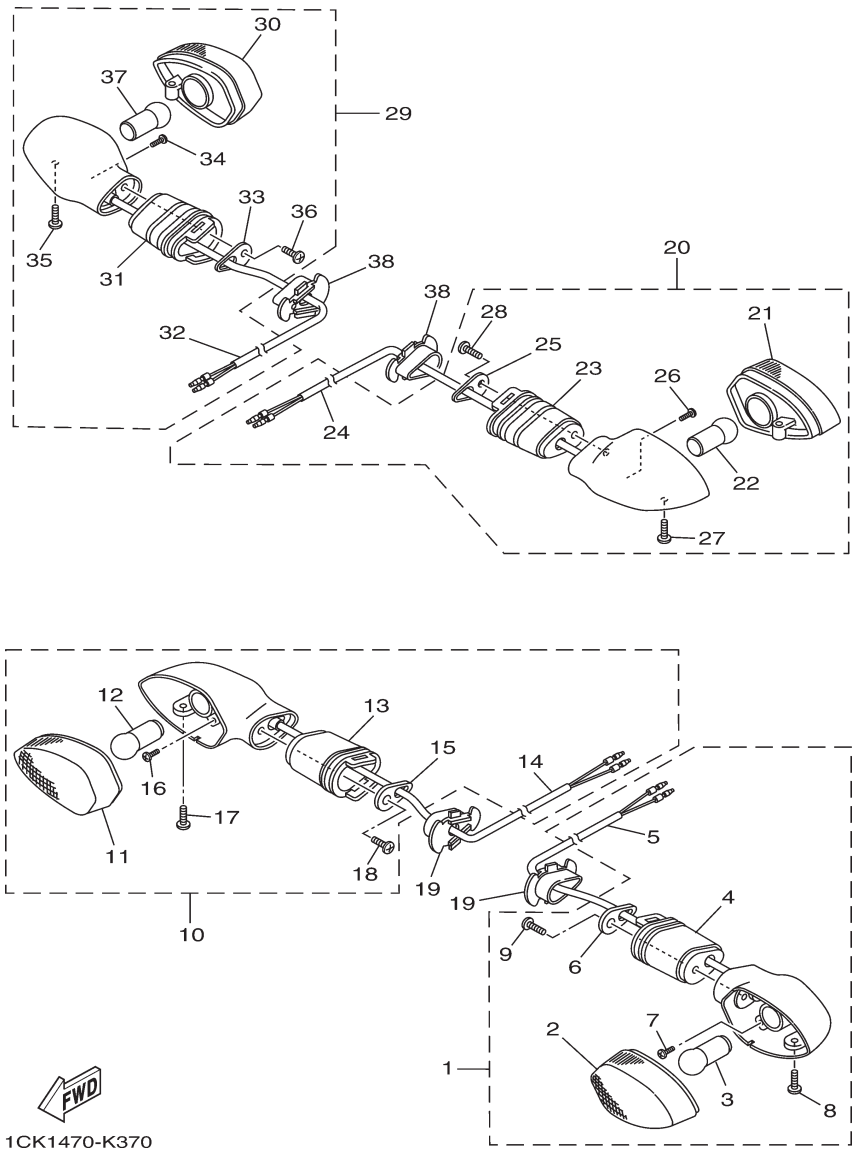

FIG. 37 (8F0) FLASHER LIGHT

REF. NO.	PART NO.	PART NAME	1CK1					REMARKS
31	20P-H3318-10	.STAY, FLASHER 1	1					
32	1CK-H334E-00	.CORD ASS'Y	1					
33	20P-H3618-00	.PLATE	1					
34	20P-H213A-00	.SCREW, FITTING	1					
35	20P-H3333-00	.SCREW, LENS FITTING	1					
36	20P-H2133-00	.SCREW, FITTING	1					
37	20P-H3311-00	.BULB, FLASHER (12V-10W)	1					
38	5YY-H3318-10	STAY, FLASHER 1	2					

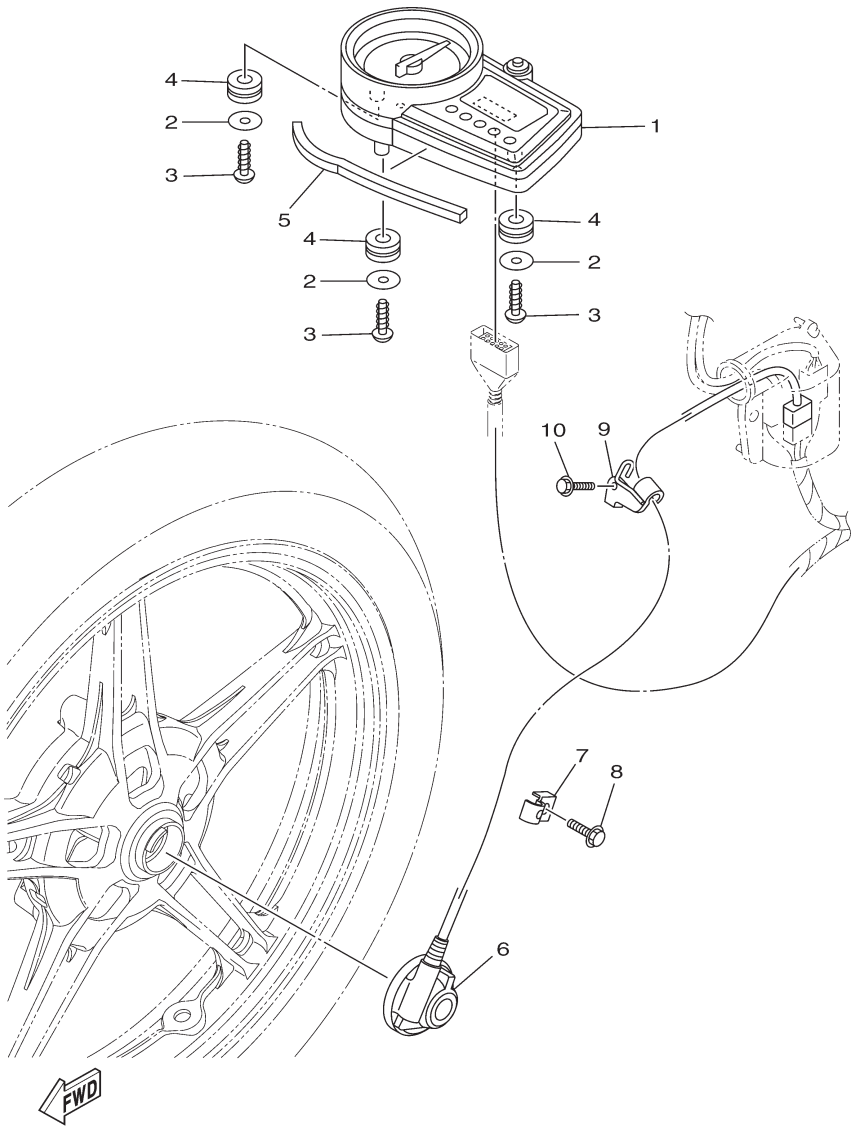

1CK1470-K380

FIG. 38 (8G0) METER

REF. NO.	PART NO.	PART NAME	1CK1					REMARKS
1	1CK-H3500-00	METER ASSY	1					
2	90201-05036	WASHER, PLATE	3					
3	97707-50016	SCREW, TRUSS HEAD TAPPING	3					
4	90480-14816	GROMMET	3					
5	20P-H3592-00	DAMPER	1					
6	1CK-H3755-00	SENSOR, SPEED	1					
7	1CK-H3595-00	CLAMP	1					
8	95027-06012	BOLT, FLANGE	1					
9	1CK-H3596-00	CLAMP	1					
10	95027-06014	BOLT, FLANGE	1					

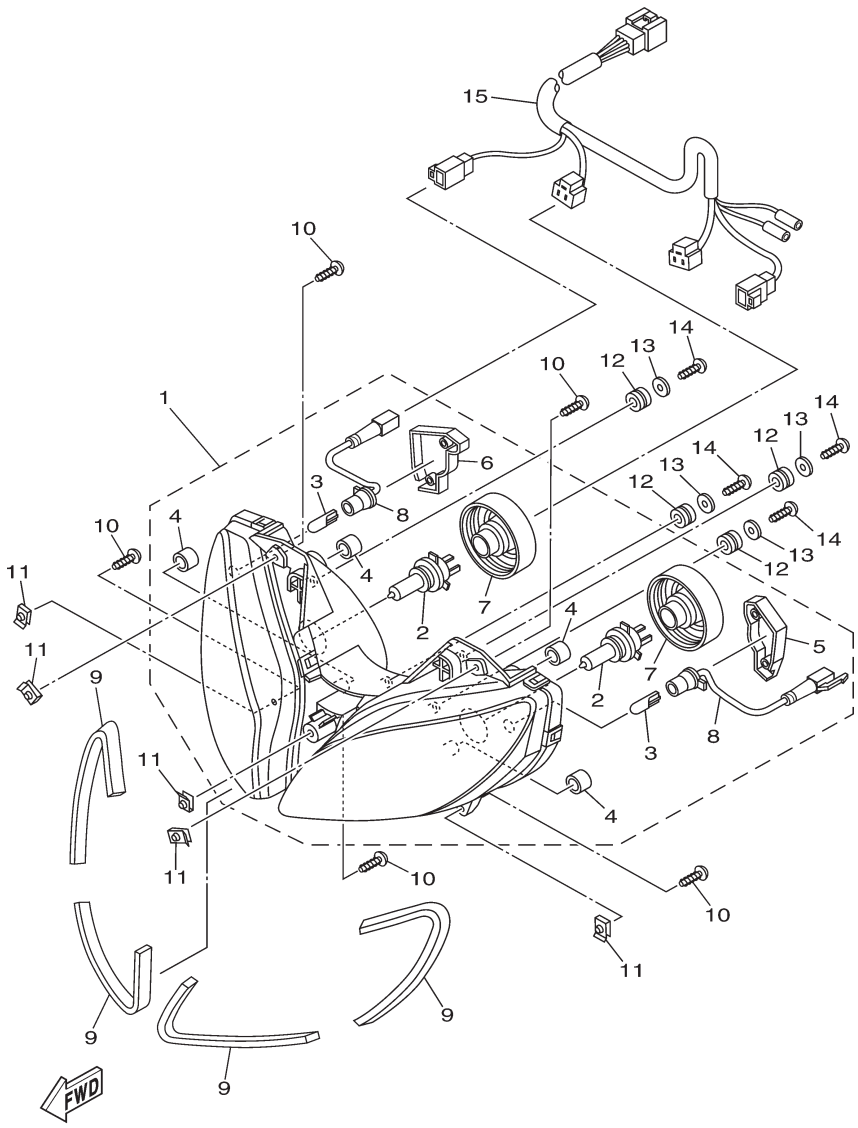

1CK1470-K390

FIG. 39 (8H0) HEADLIGHT

REF. NO.	PART NO.	PART NAME	1CK1					REMARKS
1	20P-H4300-03	HEADLIGHT ASSY	1					
2	20P-H4314-00	.BULB (12V-35/35W)	2					
3	20P-H4347-00	.BULB (12V-5W)	2					
4	20P-H4378-00	.CAP	4					
5	20P-H4544-11	.COVER	1					
6	20P-H4544-01	.COVER	1					
7	20P-H4397-00	.COVER, SOCKET	2					
8	20P-H4312-01	.CORD ASSY	2					
9	20P-H4345-00	DAMPER, HEADLIGHT	4					
10	97707-50016	SCREW, TRUSS HEAD TAPPING	5					
11	90183-05818	NUT, SPRING	5					
12	90480-14229	GROMMET	4					
13	90201-05036	WASHER, PLATE	4					
14	97707-50016	SCREW, TRUSS HEAD TAPPING	4					
15	1CK-H4359-00	CORD, HEADLIGHT	1					

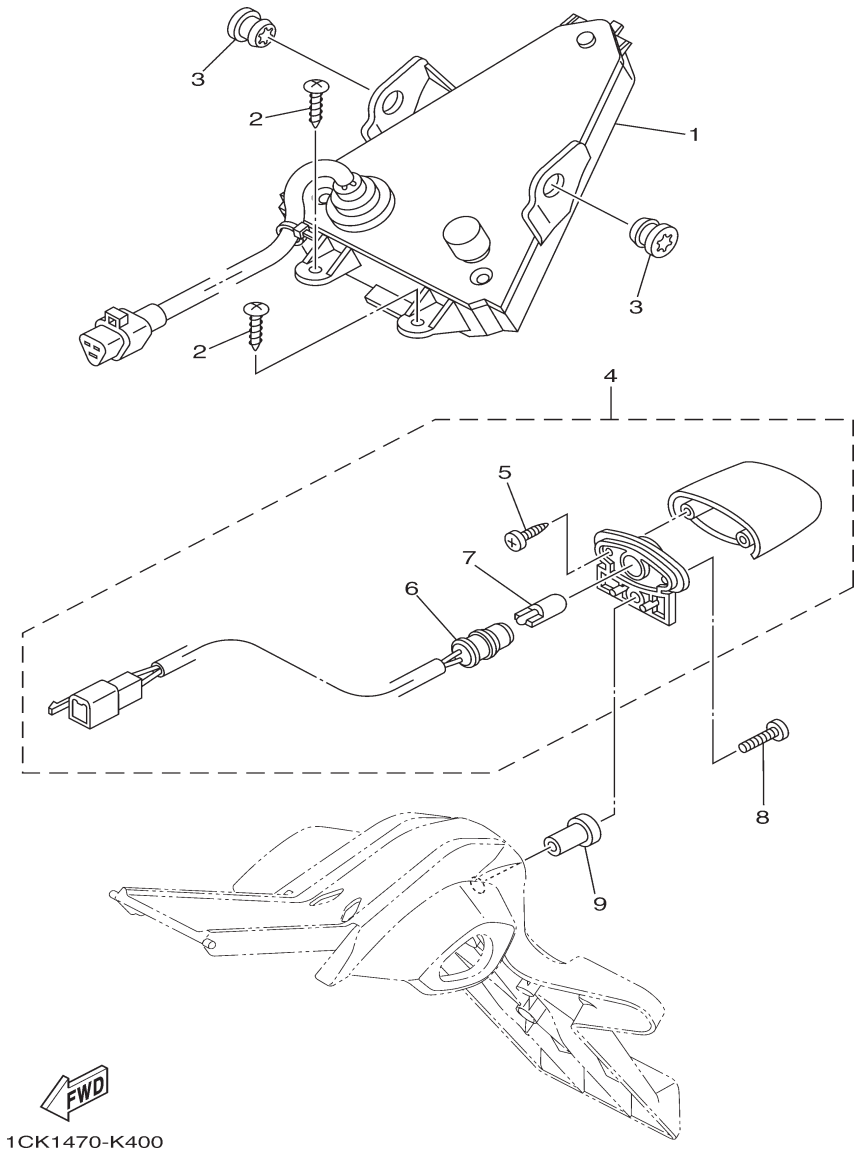

FIG. 40 (8J0) TAILLIGHT

REF. NO.	PART NO.	PART NAME	1CK1					REMARKS
1	1CK-H4710-00	TAILLIGHT UNIT ASSY	1					
2	97707-50014	SCREW, TRUSS HEAD TAPPING	2					
3	90480-13818	GROMMET	2					
4	1CK-H4740-00	LICENCE LIGHT ASSY	1					
5	1CK-H4726-00	.SCREW	2					
6	1CK-H4547-00	.CORD, LICENCE LIGHT	1					
7	1CK-H4744-00	.BULB (12V-5W)	1					
8	98907-04020	SCREW, BIND	1					
9	90179-04003	NUT	1					

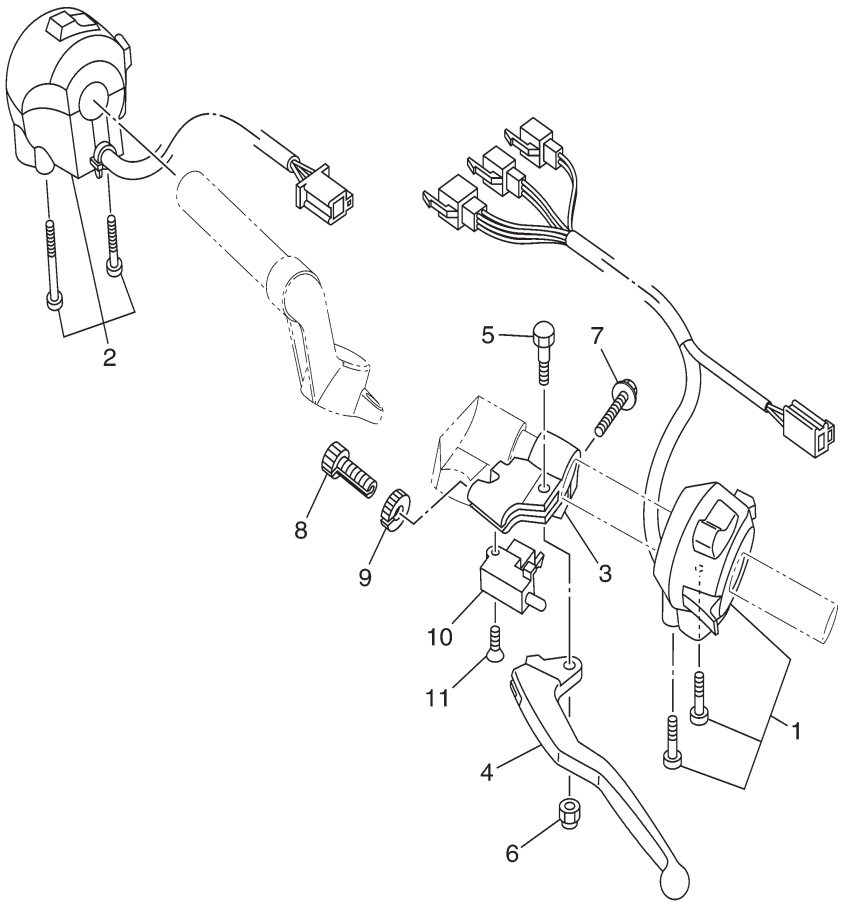

1CK1470-K410

FIG. 41 (8T0) HANDLE SWITCH & LEVER

REF. NO.	PART NO.	PART NAME	1CK1					REMARKS
1	20P-H3972-01	SWITCH, HANDLE 4	1					
2	1CK-H3963-00	SWITCH, HANDLE 3	1					
3	20P-H2911-00	HOLDER, LEVER 1	1					
4	20P-H3912-00	LEVER 1	1					
5	20P-H3945-00	BOLT, LEVER	1					
6	20P-H331B-00	NUT, SPRING	1					
7	20P-H3546-00	BOLT	1					
8	20P-H3951-00	BOLT, CABLE ADJUSTING	1					
9	20P-H3927-00	NUT, ADJUSTING	1					
10	3YX-82917-01	SWITCH	1					
11	98707-03020	SCREW, FLAT HEAD	1					

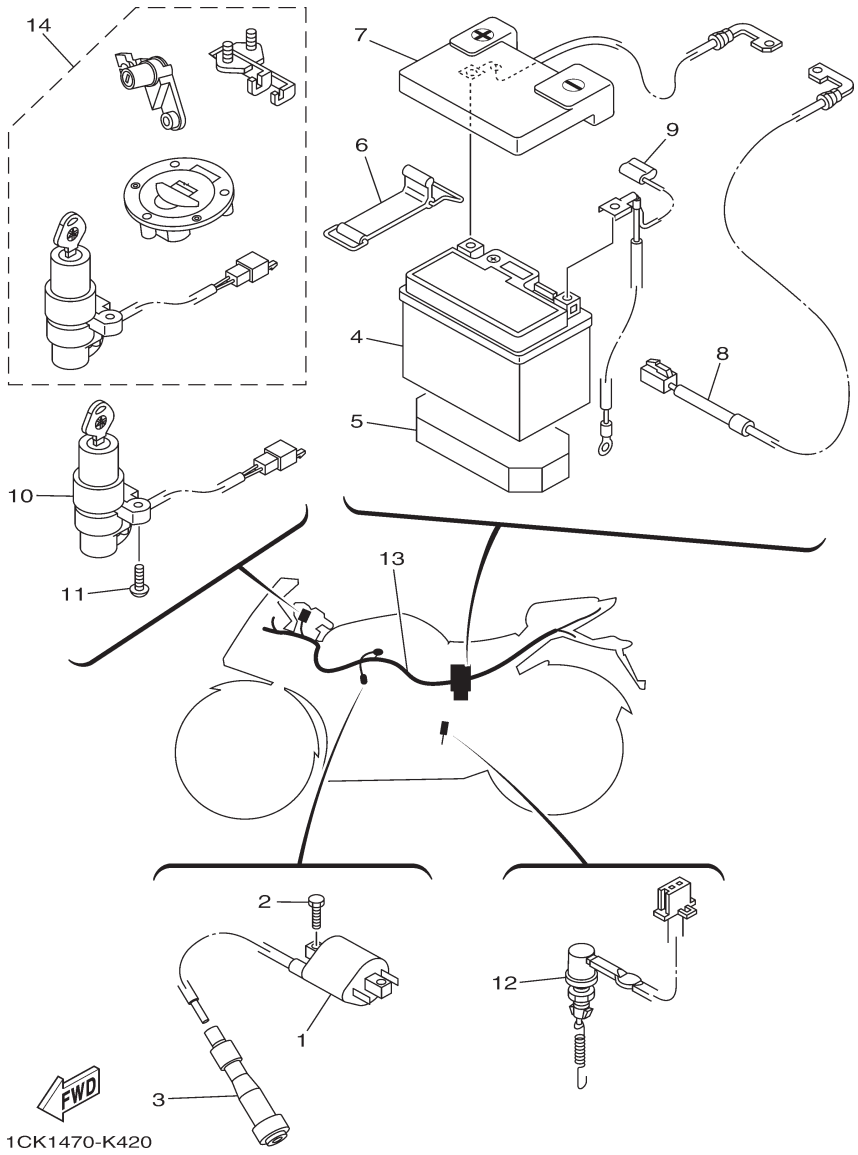

FIG. 42 (8V0) ELECTRICAL 1

REF. NO.	PART NO.	PART NAME	1CK1					REMARKS
1	1P5-H2310-00	IGNITION COIL ASSY	1					
2	97007-06016	BOLT	2					
3	20P-H2370-01	PLUG CAP ASSY	1					
4	20P-H2100-00	BATTERY ASSY (GS YTZ 5S MF)	1					
5	1CK-H2121-00	PAD, BATTERY	1					
6	20P-F811G-00	BAND	1					
7	1CK-H2115-00	WIRE, PLUS LEAD	1					
8	1CK-H2509-00	WIRE, SUB LEAD	1					
9	1CK-H2116-00	WIRE, MINUS LEAD	1					
10	54C-H2501-00	MAIN SWITCH STEERING LOCK	1					
11	90149-06843	SCREW	2					
12	1CK-H2530-00	STOP SWITCH ASSY	1					
13	1CK-H2590-00	WIRE HARNESS ASSY	1					
14	20P-XH250-10	MAIN SW. STRG. LOCK SUB ASSY	1					AP

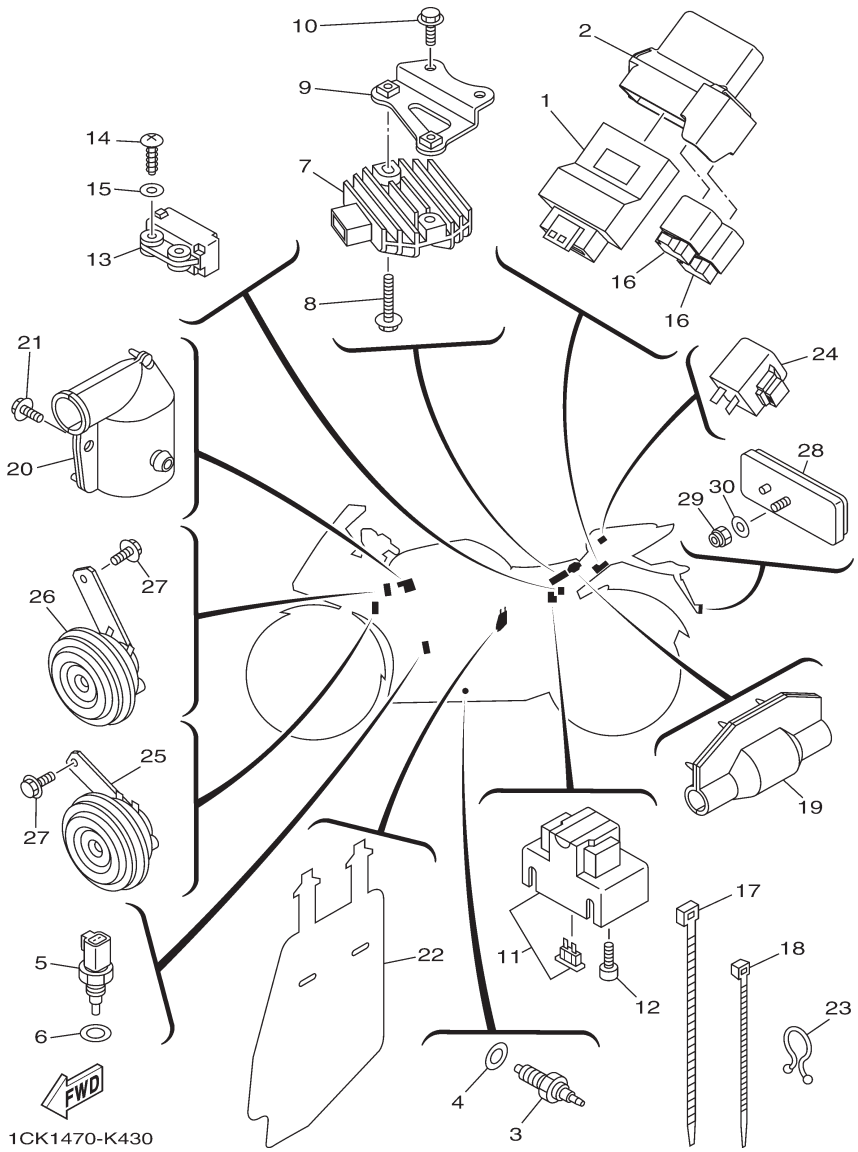

FIG. 43 (8W0) ELECTRICAL 2

REF. NO.	PART NO.	PART NAME	1CK1					REMARKS
1	1CK-H591A-00	ENGINE CONTROL UNIT ASSY	1					
2	1CK-H5546-00	BAND	1					
3	21C-H2540-00	NEUTRAL SWITCH ASSY	1					
4	90430-10148	GASKET	1					
5	38B-H5790-00	THERMOSENSOR ASSY	1					
6	90430-12801	GASKET	1					
7	2S5-H1960-00	RECTIFIER & REGULATOR ASSY	1					
8	95807-06020	BOLT, FLANGE	2					
9	1CK-H1975-00	PLATE, RECTIFIER FITTING	1					
10	95827-06010	BOLT, FLANGE	2					
11	1CK-H1940-00	STARTER RELAY ASSY	1					
12	91317-05008	BOLT	2					
13	10B-82576-00	SENSOR, LEAN ANGLE	1					
14	97707-40012	SCREW, TAPPING	2					
15	90201-047A2	WASHER, PLATE	2					
16	1CK-H1950-00	RELAY ASSY	2					
17	90464-50800	CLAMP	4					
18	90464-36800	CLAMP	8					
19	1CK-H2599-00	COVER, CONNECTER	1					
20	20P-H246B-00	COVER 1	1					
21	90119-06054	BOLT, WITH WASHER	1					
22	1CK-H2589-00	PROTECTER, WIRE HARNESS	1					
23	341-82594-00	CLAMP	2					
24	5TS-H3350-01	FLASHER RELAY ASSY	1					
25	1CK-H3371-10	HORN	1					
26	1CK-H3371-00	HORN	1					
27	95827-06012	BOLT, FLANGE	2					
28	5US-H5110-00	REFLECTOR ASSY	1					
29	95607-05100	NUT, U	1					
30	90201-05725	WASHER, PLATE	1					

1CK1

PART NO	REF. NO.
10B-82576-00	43-13
183-23411-00	21-2
183-23412-00	21-3
1CK-25873-00	32-22
1CK-E1181-00	1-19
1CK-E1400-09	2-1
1CK-E2213-00	4-17
1CK-E2411-00	6-1
1CK-E246A-00	6-14
1CK-E3750-00	8-13
1CK-E4703-00	9-1
1CK-E4708-00	9-2
1CK-E4799-00	9-6
1CK-E5421-00	11-11
1CK-E5451-00	11-2
1CK-E5461-00	11-12
1CK-E5514-00	12-1
1CK-E6150-00	13-5
1CK-E6345-00	13-21
1CK-E7402-00	14-6
1CK-E8540-00	15-1
1CK-F1110-00	17-1
1CK-F117G-00	17-9
1CK-F117K-00	24-11
1CK-F144G-00	31-35
1CK-F1511-00-1X	18-1
1CK-F1511-00-2X	18-1
1CK-F1511-00-3X	18-1
1CK-F160E-00	18-18
1CK-F1611-00	18-7
1CK-F1629-00	18-14
1CK-F1640-00	18-13
1CK-F1644-00	20-27
1CK-F1645-00	20-28
1CK-F164F-00	20-23
1CK-F1650-00	20-21
1CK-F1711-00	19-1
1CK-F171X-00-P0	19-24
1CK-F171X-00-P1	19-24
1CK-F171X-00-P2	19-24
1CK-F1721-00	19-2
1CK-F2110-00	20-1
1CK-F2128-00	20-4
1CK-F2147-00	20-30
1CK-F2151-00	20-7
1CK-F217A-00	20-10
1CK-F217F-00	20-14
1CK-F219X-00	20-20
1CK-F2210-00	20-33

PART NO	REF. NO.
1CK-F2311-00	20-17
1CK-F3100-00	22-1
1CK-F3102-00	22-2
1CK-F3103-00	22-21
1CK-F3126-00	22-3
1CK-F3136-00	22-22
1CK-F3738-00	22-20
1CK-F3738-00	22-39
1CK-F4710-00	24-1
1CK-F4750-00	24-4
1CK-F478E-00	24-9
1CK-F510C-00	25-2
1CK-F5168-00	25-1
1CK-F5181-00	25-9
1CK-F5186-00	25-8
1CK-F530S-00	27-2
1CK-F5338-00	27-1
1CK-F5377-00	27-9
1CK-F5381-00	27-16
1CK-F5383-00	27-18
1CK-F5386-00	27-17
1CK-F5388-00	27-21
1CK-F5447-00	27-10
1CK-F580U-00	26-3
1CK-F580W-00	28-3
1CK-F582U-00	26-1
1CK-F582W-00	28-1
1CK-F583T-00	30-2
1CK-F583V-00	32-1
1CK-F5886-00	30-17
1CK-F5895-00	32-14
1CK-F6240-00	29-6
1CK-F6311-00	29-13
1CK-F6312-00	29-14
1CK-F7211-00	31-31
1CK-F741L-00	31-47
1CK-F742L-00	31-48
1CK-F8100-00	17-10
1CK-F8186-00	17-11
1CK-F8381-00	34-1
1CK-H1940-00	43-11
1CK-H1950-00	43-16
1CK-H1975-00	43-9
1CK-H2115-00	42-7
1CK-H2116-00	42-9
1CK-H2121-00	42-5
1CK-H2509-00	42-8
1CK-H2530-00	42-12
1CK-H2589-00	43-22

PART NO	REF. NO.
1CK-H2590-00	42-13
1CK-H333E-00	37-24
1CK-H3340-00	37-29
1CK-H334E-00	37-32
1CK-H3371-00	43-26
1CK-H3371-10	43-25
1CK-H3500-00	38-1
1CK-H3595-00	38-7
1CK-H3596-00	38-9
1CK-H3755-00	38-6
1CK-H3963-00	41-2
1CK-H3980-00	30-12
1CK-H4359-00	39-15
1CK-H4547-00	40-6
1CK-H4710-00	40-1
1CK-H4726-00	40-5
1CK-H4740-00	40-4
1CK-H4744-00	40-7
1CK-H5546-00	43-2
1CK-H591A-00	43-1
1CK-WF47E-00	24-10
1CK-XF11E-00-P0	34-23
1CK-XF11E-10-P1	34-23
1CK-XF11E-20-P2	34-23
1CK-XF11F-00-P0	34-24
1CK-XF11F-10-P1	34-24
1CK-XF11F-20-P2	34-24
1CK-XF173-00-P0	19-16
1CK-XF17C-10-P1	19-21
1CK-XF17C-20-P2	19-21
1CK-XF41A-00-P0	23-1
1CK-XF41A-10-P1	23-1
1CK-XF41A-20-P4	23-1
1CK-XF516-00	25-1
1CK-XF516-10	25-1
1CK-XF533-00	27-1
1CK-XF533-10	27-1
1CK-XF835-00-P0	34-6
1CK-XF835-10-P1	34-6
1CK-XF835-20-P4	34-6
1CK-XF836-00-P0	34-30
1CK-XF836-10-P1	34-30
1CK-XF836-20-P2	34-30
1CK-XF83D-00	33-12
1CK-XF83D-10-P0	33-12
1CK-XF83D-30-1X	33-12
1CK-XF83G-00-P0	34-31
1CK-XF83G-10-P1	34-31
1CK-XF83G-20-P2	34-32

PART NO	REF. NO.
1P5-H2310-00	42-1
1S4-14216-00	8-16
1S7-E1133-10	1-2
1S7-H1861-00	36-4
1WG-12118-00	3-5
20P-E1166-00	8-34
20P-E441J-00	8-29
20P-E443E-00	8-24
20P-E4450-00	8-20
20P-E4453-00	8-21
20P-E4485-00	8-26
20P-E4747-00	31-51
20P-E4877-00	8-40
20P-E4881-00	8-43
20P-E4882-00	8-36
20P-E4883-00	8-45
20P-E8111-01	16-9
20P-E8112-01	16-14
20P-E8113-00	16-10
20P-E8113-00	31-32
20P-E8115-00	16-11
20P-F1338-00	17-8
20P-F1685-00	34-19
20P-F1749-00	33-8
20P-F1773-00	33-14
20P-F1823-00	19-15
20P-F1828-00	19-11
20P-F1871-00	19-8
20P-F1875-00	19-10
20P-F2141-00	20-5
20P-F2184-00	20-3
20P-F2327-00	17-7
20P-F3110-00	22-8
20P-F3110-00	22-27
20P-F3111-00	22-18
20P-F3111-00	22-37
20P-F3114-00	22-19
20P-F3114-00	22-38
20P-F3118-00	22-17
20P-F3118-00	22-36
20P-F3125-00	22-4
20P-F3125-00	22-23
20P-F3141-00	22-15
20P-F3141-00	22-34
20P-F3144-00	22-7
20P-F3144-00	22-26
20P-F3145-00	22-5
20P-F3145-00	22-24
20P-F3149-00	22-16

PART NO	REF. NO.
20P-F3149-00	22-35
20P-F3151-00	22-10
20P-F3151-00	22-29
20P-F3156-00	22-6
20P-F3156-00	22-25
20P-F3157-00	22-11
20P-F3157-00	22-30
20P-F3170-00	22-9
20P-F3170-00	22-28
20P-F3173-00	22-12
20P-F3173-00	22-31
20P-F3340-00	22-40
20P-F3346-00	22-41
20P-F3416-00	21-5
20P-F3418-00	21-8
20P-F3435-00	21-9
20P-F3469-00	29-5
20P-F3469-00	34-20
20P-F411F-00	23-4
20P-F4188-00	23-12
20P-F4191-00	23-3
20P-F4312-00	23-20
20P-F4486-00	23-18
20P-F4741-00	24-2
20P-F4780-00	24-7
20P-F5366-00-33	27-6
20P-F5854-00	32-11
20P-F585B-00	32-10
20P-F5872-00	30-1
20P-F5876-00	30-19
20P-F5894-00	32-8
20P-F6121-00	29-1
20P-F6122-00	29-2
20P-F622F-00	29-11
20P-F622H-00	29-10
20P-F6241-00	29-7
20P-F6246-00	29-8
20P-F6257-00	29-9
20P-F6280-00	34-13
20P-F6290-00	34-14
20P-F6315-00	29-15
20P-F6335-00	29-17
20P-F6372-00	29-18
20P-F7311-00	31-1
20P-F7411-00	31-10
20P-F7411-00	31-23
20P-F7431-00	31-41
20P-F7435-00	31-14
20P-F7435-00	31-27

PART NO	REF. NO.
20P-F7441-00	31-42
20P-F7442-00	31-8
20P-F7443-00	31-21
20P-F7445-00	31-19
20P-F7446-01	31-38
20P-F7451-00	31-9
20P-F7461-00	31-22
20P-F811G-00	42-6
20P-F8284-00	17-5
20P-F832U-00	33-11
20P-F8356-01	34-10
20P-F836B-00	19-22
20P-F836R-00	34-2
20P-F837L-00	34-37
20P-F837M-00	34-38
20P-F8385-10-P0	33-2
20P-F8385-10-P2	33-2
20P-F8385-10-P3	33-2
20P-F8395-11-P0	33-3
20P-F8395-11-P2	33-3
20P-F8395-11-P3	33-3
20P-F8483-00	34-15
20P-F8484-00	34-16
20P-H2100-00	42-4
20P-H2133-00	37-9
20P-H2133-00	37-18
20P-H2133-00	37-28
20P-H2133-00	37-36
20P-H213A-00	37-7
20P-H213A-00	37-16
20P-H213A-00	37-26
20P-H213A-00	37-34
20P-H2370-01	42-3
20P-H246B-00	43-20
20P-H2911-00	41-3
20P-H3311-00	37-3
20P-H3311-00	37-12
20P-H3311-00	37-22
20P-H3311-00	37-37
20P-H3318-00	37-4
20P-H3318-00	37-13
20P-H3318-10	37-23
20P-H3318-10	37-31
20P-H331B-00	41-6
20P-H3333-00	37-8
20P-H3333-00	37-17
20P-H3333-00	37-27
20P-H3333-00	37-35
20P-H3546-00	41-7

PART NO	REF. NO.
20P-H3592-00	38-5
20P-H3618-00	37-6
20P-H3618-00	37-15
20P-H3618-00	37-25
20P-H3618-00	37-33
20P-H3912-00	41-4
20P-H3927-00	41-9
20P-H3945-00	41-5
20P-H3951-00	41-8
20P-H3972-01	41-1
20P-H4300-03	39-1
20P-H4312-01	39-8
20P-H4314-00	39-2
20P-H4345-00	39-9
20P-H4347-00	39-3
20P-H4378-00	39-4
20P-H4397-00	39-7
20P-H4544-01	39-6
20P-H4544-11	39-5
20P-W0042-00	32-2
20P-W0046-00	28-9
20P-XH250-10	42-14
21C-E1496-20	2-9
21C-E1531-00	2-15
21C-E3362-00	2-13
21C-E4613-00	9-12
21C-E6135-10	13-18
21C-E6154-00	13-6
21C-E6324-00	13-10
21C-E6331-00	13-9
21C-E6333-00	13-12
21C-E6337-00	13-13
21C-E6356-01	13-15
21C-E6358-00	13-14
21C-E6371-00	13-7
21C-E8140-00	16-1
21C-F3158-00	22-13
21C-F3158-00	22-32
21C-F3181-00	22-14
21C-F3181-00	22-33
21C-F4763-00	24-6
21C-H2540-00	43-3
2PB-F580W-00	28-3
2S5-1410H-00	8-15
2S5-H1960-00	43-7
2VN-F5866-00	32-6
2YK-F7222-00	32-4
341-82594-00	43-23
36Y-2589H-00	30-6

PART NO	REF. NO.
38B-E1102-00	1-1
38B-E111F-00	4-8
38B-E1185-00	5-4
38B-E1191-00	1-6
38B-E1193-00	1-14
38B-E1196-00	5-5
38B-E1351-00	1-24
38B-E1454-00	2-14
38B-E1536-10	2-8
38B-E1633-00	2-5
38B-E1951-00	5-8
38B-E1952-00	5-9
38B-E2113-00	3-4
38B-E2119-00	3-3
38B-E2126-00	3-7
38B-E2151-00	3-8
38B-E2161-00	3-11
38B-E2170-00	4-1
38B-E2210-00	4-16
38B-E2231-00	4-11
38B-E2241-00	4-12
38B-E2256-00	4-15
38B-E2280-10	4-5
38B-E240A-00	6-4
38B-E2413-00	6-2
38B-E2422-00	5-1
38B-E2428-00	5-3
38B-E2443-00	5-13
38B-E2450-00	5-7
38B-E3300-00	7-1
38B-E3324-00	7-8
38B-E3327-00	7-13
38B-E3411-00	7-4
38B-E3440-00	7-7
38B-E3447-00	7-9
38B-E3542-00	8-3
38B-E3556-00	8-2
38B-E3575-00	8-17
38B-E3585-00	8-1
38B-E3586-00	8-6
38B-E4840-00	1-9
38B-E4890-00	1-10
38B-E5150-00	10-1
38B-E5351-00	7-3
38B-E5362-00	11-16
38B-E5411-00	11-1
38B-E5418-00	11-9
38B-E5441-00	4-18
38B-E5521-00	12-2

PART NO	REF. NO.
38B-E5524-10	12-5
38B-E5598-00	4-14
38B-E6111-00	13-1
38B-E6193-00	13-2
38B-E6357-01	13-22
38B-E6380-01	13-20
38B-E7211-00	14-7
38B-E7221-00	14-15
38B-E7231-00	14-13
38B-E7241-00	14-12
38B-E7251-00	14-9
38B-E7258-00	14-8
38B-E7261-00	14-14
38B-E7410-00	14-1
38B-E7471-00	14-4
38B-E8101-00	16-4
38B-E8337-00	16-3
38B-E8511-00	15-2
38B-E8512-00	15-3
38B-E8513-00	15-4
38B-E8531-00	15-5
38B-F4491-00	23-17
38B-H1800-01	36-1
38B-H3922-00	30-9
38B-H5790-00	43-5
3AY-H1801-00	36-2
3AY-H1828-00	36-5
3C1-11603-00	2-7
3C1-12159-01	3-9
3C1-12159-01	3-12
3C1-13770-10	8-9
3C1-13971-00	8-11
3C1-E1311-00	1-23
3C1-E1631-11	2-4
3C1-E3907-10	23-16
3C1-E4452-00	8-22
3C1-E6344-00	13-17
3C1-F5852-00	30-5
3C1-F5855-00	30-8
3C1-H1410-11	35-2
3C1-H1450-10	35-1
3C1-W0045-10	26-12
3C1-W0047-00	26-5
3C1-W0057-00	26-4
3FV-F589A-00	32-15
3GD-W0047-00	28-5
3RW-F5854-00	30-4
3RW-F5867-00	30-7
3SP-F5914-51	28-8

PART NO	REF. NO.
3YX-82917-01	41-10
437-83936-11	30-20
4C9-W0048-00	26-6
4LS-E7456-00	14-22
4LS-F4741-00	24-5
4ML-F582A-50	32-5
4S3-F5919-00	28-6
4S3-W0045-00	28-9
4S3-W0048-00	28-7
4S3-W0057-00	28-4
4TT-F7238-00	32-16
54B-E1476-00	2-12
54B-E5580-00	12-8
54B-E6144-00	13-16
54B-E6321-00	13-8
54B-E6351-00	13-11
54B-F5364-00	27-4
54B-H331A-00	37-2
54B-H332A-00	37-11
54B-H333A-00	37-30
54B-H334A-00	37-21
54C-F5852-00	32-9
54C-F831U-00	33-10
54C-H2501-00	42-10
54D-WF461-00	23-13
5BP-F3873-01	21-1
5BP-F3875-00	22-42
5CA-14147-00	8-10
5D7-8183G-00	36-3
5JW-14104-00	8-14
5MT-25398-00	27-15
5MT-25398-00	25-7
5MT-25398-10	27-15
5MT-25398-10	25-7
5MT-25398-20	27-15
5MT-25398-20	25-7
5P0-F5919-00	26-10
5P0-W0041-10	30-3
5ST-E2590-00	6-8
5TL-2341E-00	21-4
5TS-F1681-20	18-9
5TS-H3350-01	43-24
5US-F3485-00	34-21
5US-H5110-00	43-28
5YP-12117-00	3-6
5YP-1482K-00	1-8
5YP-E2111-00	3-1
5YP-E2121-00	3-2
5YP-E2156-00	3-14

PART NO	REF. NO.
5YP-E2157-00	4-7
5YP-E2288-00	4-6
5YP-E2405-00	6-5
5YP-E2671-00	6-7
5YP-E2675-00	6-6
5YP-F5917-00	26-8
5YP-F5924-00	26-11
5YP-F5925-01	26-9
5YP-F5937-00	26-7
5YP-F5939-00	26-13
5YY-F3462-00	22-43
5YY-F413B-00	23-2
5YY-H3318-10	37-19
5YY-H3318-10	37-38
90101-08006	27-22
90105-08850	1-16
90105-10006	21-11
90105-10082	26-14
90105-10311	20-13
90105-10323	17-2
90105-106A7	31-3
90105-10857	17-3
90109-06183	19-9
90109-06220	18-8
90109-06259	16-2
90109-06577	30-10
90109-08015	28-2
90110-05806	23-14
90110-06215	23-10
90110-06287	23-8
90110-08814	31-18
90110-08814	31-37
90110-10012	31-16
90110-10012	31-29
90111-05002	34-39
90111-05003	19-7
90111-05003	33-16
90111-05003	34-29
90111-05003	34-35
90111-06117	18-4
90111-06117	33-4
90111-06117	34-25
90111-06139	20-22
90111-06826	9-5
90111-08836	34-11
90111-08847	26-2
90116-08834	27-11
90119-06044	32-21
90119-06051	8-33

PART NO	REF. NO.
90119-06054	43-21
90119-06233	18-6
90119-06234	23-7
90149-06829	4-13
90149-06843	42-11
90150-05024	34-3
90153-06002	1-3
90153-06002	1-25
90159-06181	19-3
90159-06181	19-18
90159-06181	19-23
90163-05803	8-23
90170-05302	3-10
90170-05302	3-13
90170-10012	2-23
90179-04003	40-9
90179-05523	34-4
90179-10811	17-4
90179-10813	20-15
90179-12802	13-4
90179-14001	13-19
90179-25615	21-6
90183-05061	19-6
90183-05061	33-9
90183-05061	34-7
90183-05076	24-14
90183-05818	19-20
90183-05818	34-34
90183-05818	39-11
90183-06802	8-32
90201-047A2	43-15
90201-05036	38-2
90201-05036	39-13
90201-05725	43-30
90201-06072	6-11
90201-06557	18-12
90201-08083	32-18
90201-08609	1-17
90201-08612	9-15
90201-10066	31-17
90201-10066	31-30
90201-10118	30-16
90201-10118	32-24
90201-105E8	12-3
90201-12019	13-3
90201-12019	35-6
90201-15022	2-10
90201-15837	27-20
90201-173F4	14-17

PART NO	REF. NO.
90201-20814	14-16
90201-25290	12-7
90202-05180	33-17
90202-05180	34-28
90202-05180	34-36
90202-26142	21-7
90208-20003	13-27
90209-10020	21-12
90209-18208	14-10
90214-10006	2-11
90215-10284	2-22
90240-08124	32-17
90240-08800	31-12
90240-08800	31-25
90240-08800	31-45
90249-02002	31-15
90249-02002	31-28
90269-06008	19-5
90269-06008	19-19
90280-03017	2-3
90282-05031	2-21
90338-09802	30-13
90338-16008	8-30
90340-14824	11-5
90340-32823	11-7
90387-06023	9-4
90387-064W3	6-12
90387-06890	23-11
90387-06892	23-5
90387-068C2	33-6
90387-068C2	34-18
90387-068C2	34-26
90387-068C4	34-40
90387-068C8	18-2
90387-068G0	18-16
90387-068G0	20-18
90387-068H0	20-26
90387-068H8	31-39
90387-068S1	8-41
90387-07819	20-8
90387-07819	20-25
90387-07819	20-32
90387-08812	31-50
90387-10003	31-4
90387-10814	20-12
90387-15810	2-16
90387-22591	29-19
90401-10820	30-15
90401-10820	32-23

PART NO	REF. NO.
90413-13800	8-44
90430-06014	1-4
90430-06014	1-13
90430-06014	1-26
90430-09803	8-5
90430-10148	43-4
90430-12801	43-6
90445-08831	19-12
90445-08832	19-13
90445-12804	6-20
90445-16807	31-34
90445-21848	31-7
90450-27803	6-17
90450-27803	6-19
90450-39804	8-39
90464-17003	32-25
90464-20021	34-8
90464-25160	23-21
90464-36800	43-18
90464-50800	43-17
90464-54086	33-1
90464-54086	34-9
90467-08003	19-14
90467-08808	8-4
90467-09006	23-22
90467-10808	6-21
90467-12085	32-13
90467-12800	8-25
90467-13802	8-38
90467-13816	8-35
90467-15012	8-37
90467-16805	8-46
90467-20050	8-27
90467-23059	8-31
90480-01558	19-4
90480-01558	34-12
90480-01558	34-27
90480-01559	33-15
90480-01803	6-13
90480-01811	33-7
90480-10805	9-11
90480-12581	9-3
90480-12805	18-3
90480-13818	40-3
90480-14003	33-5
90480-14229	39-12
90480-14816	38-4
90480-15363	6-9
90480-15483	23-6

PART NO	REF. NO.
90480-18549	23-9
90480-18859	18-5
90480-25482	18-19
90501-06800	15-6
90501-12743	31-43
90501-18576	7-5
90506-20193	31-33
90506-28800	31-2
90508-183B9	31-11
90508-184B0	31-24
90508-32837	16-5
90520-02810	34-5
90520-08801	19-25
91317-05008	43-12
91317-05010	23-15
91317-06016	35-4
91317-06020	4-19
91317-06020	12-9
91317-06020	29-4
91317-06025	34-17
91317-06025	35-3
91317-06030	29-12
91317-06100	1-22
91317-08025	29-3
91317-08030	21-10
91380-06016	9-8
91401-20012	16-13
91401-20012	31-13
91401-20012	31-26
91401-20012	31-46
91401-20012	32-19
91810-14809	1-20
91810-14809	1-21
91810-14809	10-2
91810-14809	11-3
91810-14809	11-13
91811-10005	1-7
92012-05016	23-19
92012-06010	31-36
92012-06016	31-20
92012-06020	31-40
92012-08012	24-3
92012-08020	32-20
92017-06014	20-24
92907-06200	16-12
92907-10600	31-5
92990-06200	9-7
92990-06600	9-9
93101-10805	11-18

PART NO	REF. NO.
93102-12809	16-8
93102-12877	13-25
93102-20806	14-20
93103-10804	5-2
93106-17802	20-16
93106-22808	25-3
93106-22808	27-5
93106-26801	27-8
93210-09809	4-3
93210-11807	2-17
93210-11808	1-15
93210-13804	2-18
93210-14812	11-6
93210-15620	32-7
93210-19809	5-16
93210-19809	11-17
93210-26810	36-6
93210-32807	8-7
93210-32813	11-8
93210-34805	7-6
93210-54806	7-12
93210-84802	5-6
93306-000Y5	5-10
93306-001X7	4-4
93306-003YN	14-18
93306-004XX	14-2
93306-054Y5	27-7
93306-202YD	2-19
93306-202YE	14-3
93306-203XS	2-20
93306-204Y6	14-19
93306-252YH	25-4
93306-252YH	27-3
93306-305X7	2-2
93306-906Y0	4-2
93310-325X3	12-6
93315-112Y9	13-24
93315-31758	20-11
93317-318Y5	20-2
93410-22039	14-11
93450-16115	2-6
93501-04805	31-44
93505-16844	13-23
93608-30839	16-7
93822-15808	14-21
93900-00824	25-6
93900-00824	27-14
94109-17803	25-5
94113-17806	27-13

PART NO	REF. NO.
94568-A8096	4-10
94568-E5131	27-24
94668-E5021	27-25
94703-00883	1-18
95022-06012	7-14
95022-06016	11-10
95022-06020	7-10
95022-06020	8-8
95022-06040	10-6
95022-06040	11-4
95022-06040	11-14
95022-06045	10-4
95022-06050	11-15
95022-06055	10-3
95022-06070	10-5
95022-06080	7-11
95022-06090	11-19
95027-06010	4-9
95027-06010	14-23
95027-06012	5-12
95027-06012	38-8
95027-06014	1-11
95027-06014	30-18
95027-06014	38-10
95027-06020	1-12
95027-06020	6-3
95027-06025	5-11
95027-06025	5-14
95027-06025	30-14
95027-06050	5-15
95301-08700	32-3
95307-06600	18-11
95602-06100	30-11
95602-06200	18-17
95602-08200	27-12
95602-14200	25-10
95602-14200	27-19
95607-05100	43-29
95617-08620	1-5
95617-10100	31-6
95702-08500	27-23
95707-06500	24-8
95707-08500	9-13
95707-12500	20-6
95707-12500	35-5
95807-06020	43-8
95817-06030	8-12
95817-08012	31-49
95817-08016	17-6

PART NO	REF. NO.
95817-08025	9-14
95817-08040	9-16
95827-06010	43-10
95827-06012	20-29
95827-06012	43-27
95827-06014	20-9
95827-06014	20-19
95827-06014	20-31
95827-06025	6-10
97007-06016	42-2
97024-06020	16-15
97027-06014	8-42
97080-06008	9-10
97607-05212	34-22
97607-06214	18-10
97702-50016	18-15
97707-40012	43-14
97707-50012	19-26
97707-50012	33-13
97707-50012	34-33
97707-50014	40-2
97707-50016	38-3
97707-50016	39-10
97707-50016	39-14
98507-05012	24-13
98507-05012	29-16
98507-05020	24-12
98507-05025	7-2
98517-06012	14-5
98707-03020	41-11
98707-04045	32-12
98907-04020	40-8
99001-10600	16-6
99009-10400	12-4
99009-20500	13-26

COPYRIGHT: All rights reserved. No part of this publication
may be reproduced without permission.

YAMAHA

INDIA YAMAHA MOTOR PVT. LIMITED

19/6 Mathura Road, Faridabad - 121 006, INDIA

1Y10-(PC-01)-042-09-11-E
PRINTED IN INDIA