YAMAHA

PARTS CATALOGUE

YZF-R15 (20 P1)

YAMAHA
GENUINE
Parts & Accessories

COPYRIGHT: All rights reserved. No part of this publication may be reproduced without permission.

INDIA YAMAHA MOTOR PVT. LIMITED

A-3 INDUSTRIAL AREA, Noida - Dadri Road, Surajpur - 201 306 (UP)

1Y10 (PC-01)-008-05-08-E

PRINTED IN INDIA

YZF-R15 (20 PI)
PARTS CATALOGUE
INDIA YAMAHA MOTOR PVT. LTD.
1st edition, May 2008
All rights reserved.
Any reprinting or unauthorized use
without the written permission of
INDIA YAMAHA MOTOR PVT. LTD.
is expressly prohibited.
Printed in INDIA

FOREWORD

This Parts Catalogue is related to the parts in use for the YAMAHA - 20 P1 When you are ordering replacement parts for 20 P1 refer to this Parts Catalogue and quote both part numbers and part names correctly.

1. Modifications or additions which have been made after issue of the Parts Catalogue will be announced in the Service Actions. It is advisible that according to the Service Action you make necessary corrections tothe Parts Catalogue on hand to keep it up-to-date.

2. Indication of No. of constituent parts for assembly.
   The numeral appearing to the right of each constituent part under the description indicates the quantity of such parts for each individual assembly unit.

EXAMPLE

Part No.	Description	Qty
3CI-E1400-00	CRANK SHAFT ASSY.	1
20P-H2100-00	BATTERY ASSY	1
90445-08336	HOSE	1
1S7-E1102-00	CYLINDER HEAD	1

Colour Code	Colour Name	Abbreviate
P0	DEEP PURPLISH BLUE METALLIC	DPBMY
PI/P0	BLACK METALLIC X	SMX

NOTICE

The description and illustration in this Parts Catalogue may not necessarily match with the physical appearance of the parts.

INDIA YAMAHA MOTOR PVT. LTD. reserves the right to carry out modifications on the vehicle, parts or accessories, as may be considered necessary, without being obliged to update this Parts Catalogue immediately.

No part of this Publication may be reproduced without written permission of INDIA YAMAHA MOTOR PVT. LTD.

3. Applicable Serial No. and Color Code

1	Frame Serial No	XXX	20P	X	1	X	X	X	xxxxxx
		Mfr Code	Model Code	Prod No Code	Varient Code	Month Code	Year Code	Factory Code	Serial No
2	Frame Serial No		20P	xxxxxx					
			Model Code	Serial No.					

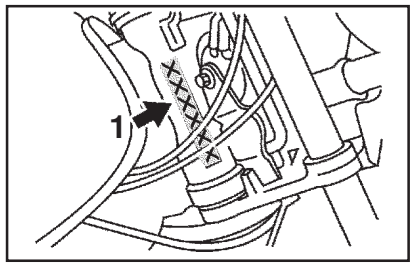

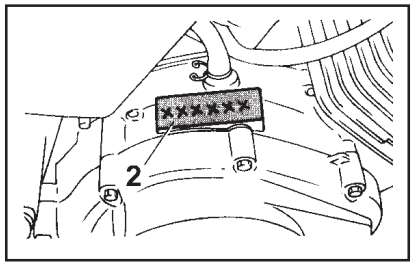

CONTENTS

ENGINE

CYLINDER 2
CRANKSHAFT/PISTON 3
VALVE 4
CAMSHAFT/CHAIN 5
WATER PUMP 6
RADIATOR & HOSE 7
OIL PUMP 8
INTAKE 9
EXHAUST 11
CRANKCASE 12
CRANKCASE COVER 1 13
STARTER CLUTCH 14
CLUTCH 15
TRANSMISSION 16
SHIFT CAM FORK 17
SHIFT SHAFT 18

CHASSIS

FRAME 19
FENDER 20
SIDE COVER 21
REAR ARM. & SUSPENSION 22
STEERING 23
FRONT FORK 24
FUEL TANK 25
SEAT 26
FRONT WHEEL 27
FRONT BRAKE CALIPER 28
REAR WHEEL 29
REAR BRAKE CALIPER 30
STEERING HANDLE & CABLE 31
FRONT MASTER CYLINDER 32
STAND FOOTREST 33
REAR MASTER CYLINDER 35
LEG SHIELD 36
WINDSHIELD 37
GENERATOR 39
STARTER MOTOR 40
FLASHER LIGHT 41
METER 42
HEAD LIGHT 43
TAIL LIGHT 44
HANDLE SWITCH & LEVER 45
ELECTRICAL 1 46
ELECTRICAL 2 47
INDEX
NUMERICAL INDEX

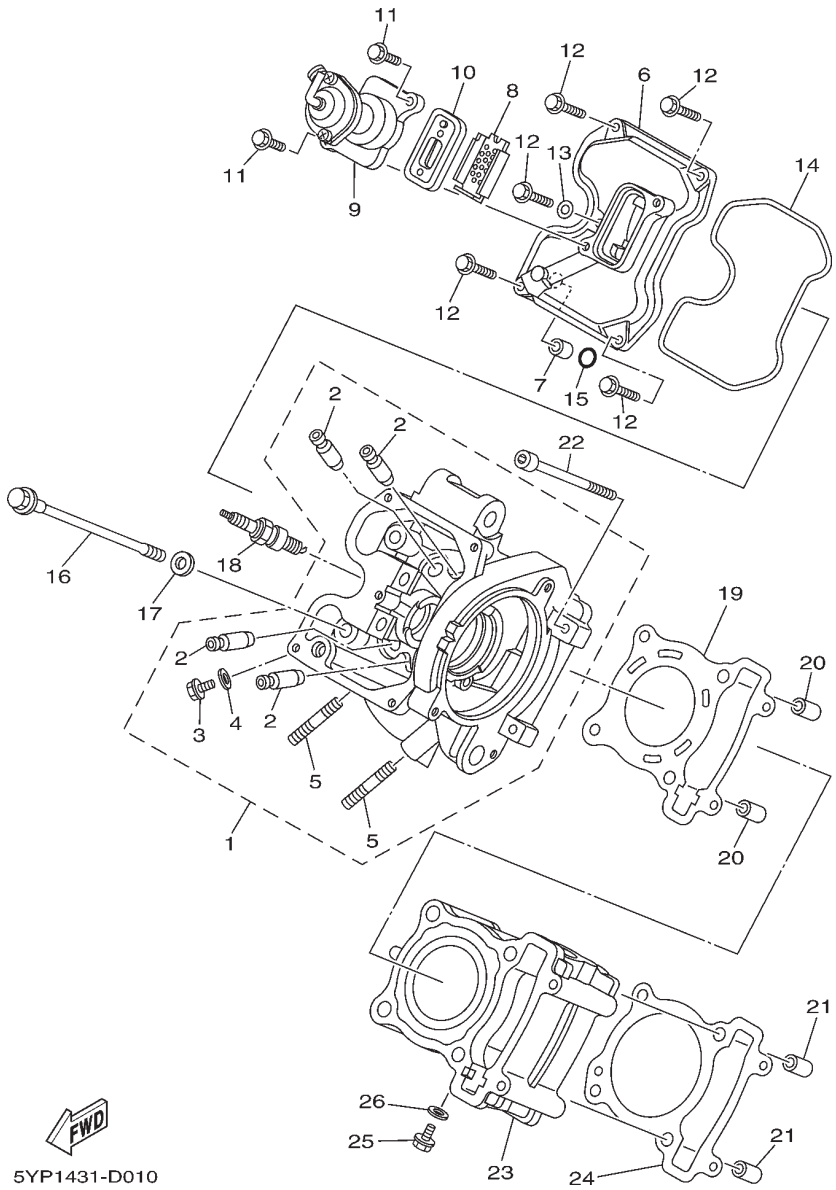

FIG. 1 (1) CYLINDER

REF. NO.	PART NO.	PART NAME	20 P1					REMARKS
1	1S7-E1102-00	CYLINDER HEAD ASSY	1					
2	1S7-E1133-10	.GUIDE, VALVE 1	4					
3	90153-06803	.SCREW, HEXAGON	1					
4	90430-06014	.GASKET	1					
5	95617-08620	.BOLT, STUD	2					
6	1S7-E1191-00	COVER, CYLINDER HEAD 1	1					
7	91811-10005	PIN, DOWEL	1					
8	1S7-E482K-00	PLATE	1					
9	1S7-E4840-00	AIR CUT VALVE ASSY	1					
10	1S7-E4890-00	REED VALVE ASSY	1					
11	95027-06014	BOLT, FLANGE	2					
12	95027-06020	BOLT, FLANGE	5					
13	90430-06014	GASKET	1					
14	1S7-E1193-00	GASKET, HEAD COVER 1	1					
15	93210-11803	O-RING	1					
16	90105-08850	BOLT, FLANGE	4					
17	90201-08609	WASHER, PLATE	4					
18	94703-00883	PLUG, SPARK (NGK CR8E)	1					
19	3C1-E1181-00	GASKET, CYLINDER HEAD 1	1					
20	91810-14809	PIN, DOWEL	2					
21	91810-14809	PIN, DOWEL	2					
22	91317-06100	BOLT	2					
23	3C1-E1311-00	CYLINDER 1	1					
24	1S7-E1351-00	GASKET, CYLINDER	1					
25	90153-06803	SCREW, HEXAGON	1					
26	90430-06014	GASKET	1					

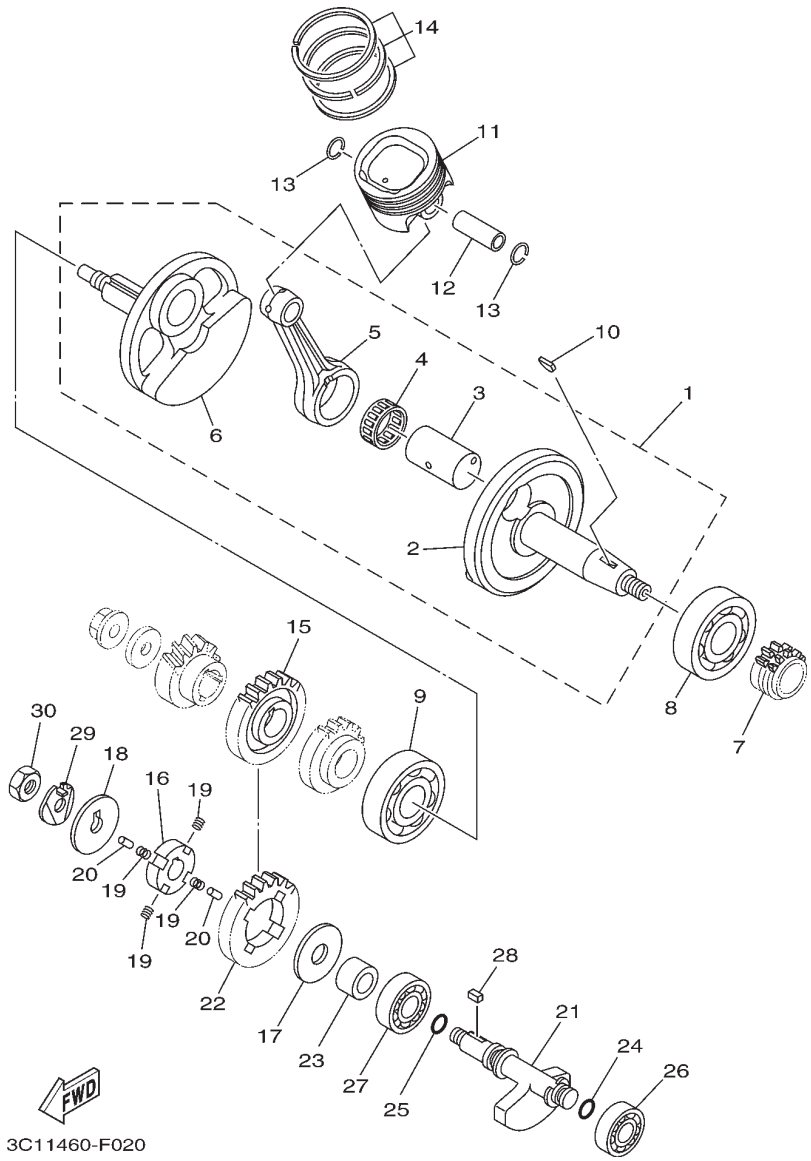

FIG. 2 (1I0) CRANKSHAFT & PISTON

REF. NO.	PART NO.	PART NAME	20 P1					REMARKS
1	3C1-E1400-00	CRANKSHAFT ASSY	1					
2	3C1-E1412-00	.CRANK 1	1					
3	3C1-11681-00	.PIN, CRANK 1	1					
4	93310-528YB	.BEARING	1					
5	3C1-E1651-10	.ROD, CONNECTING	1					
6	3C1-E1422-00	.CRANK 2	1					
7	3C1-E1549-00	SPROCKET, CAM CHAIN	1					
8	93306-305YF	BEARING	1					
9	93306-305X7	BEARING	1					
10	90280-03017	KEY, WOODRUFF	1					
11	3C1-E1631-00	PISTON (STD)	1					
12	3C1-E1633-00	PIN, PISTON	1					
13	93450-16115	CIRCLIP	2					
14	3C1-11603-00	PISTON RING SET (STD)	1					
15	3C1-11536-00	GEAR, DRIVE	1					
16	3C1-E1496-00	BOSS, BUFFER	1					
17	90201-15821	WASHER, PLATE	1					
18	90214-10800	WASHER, CLAW	1					
19	90501-16800	SPRING, COMPRESSION	4					
20	93604-08800	PIN, DOWEL	2					
21	3C1-11454-00	WEIGHT 1	1					
22	3C1-11531-00	GEAR, BALANCE WEIGHT	1					
23	90387-15810	COLLAR	1					
24	93210-11805	O-RING	1					
25	93210-13803	O-RING	1					
26	93306-252Y9	BEARING	1					
27	93306-203XK	BEARING	1					
28	90282-05031	KEY, STRAIGHT	1					
29	90215-10284	WASHER, LOCK	1					
30	90170-10405	NUT	1					

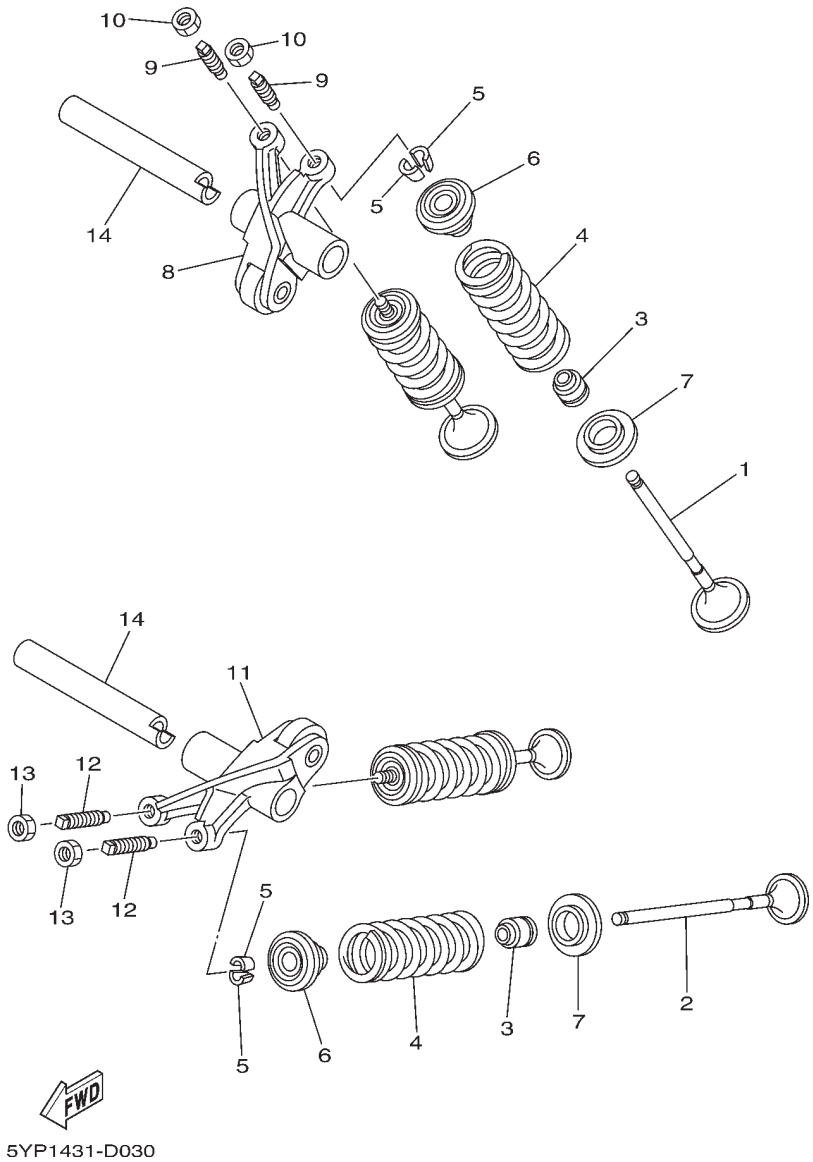

FIG. 3 (1M0) VALVE

REF. NO.	PART NO.	PART NAME	20 P1					REMARKS
1	1S7-E2111-00	VALVE, INTAKE	2					
2	1S7-E2121-00	VALVE, EXHAUST	2					
3	2S6-E2119-00	SEAL, VALVE STEM	4					
4	3C1-E2113-00	SPRING, VALVE INNER	4					
5	3S0-E2118-00	COTTER, VALVE	8					
6	5YP-12117-00	RETAINER, VALVE SPRING	4					
7	5YP-E2126-00	SEAT, VALVE SPRING 2	4					
8	1S7-E2151-00	ARM, VALVE ROCKER	1					
9	3C1-12159-00	SCREW, VALVE ADJUSTING	2					
10	90170-05302	NUT	2					
11	1S7-E2161-00	ARM, VALVE ROCKER 2	1					
12	3C1-12159-00	SCREW, VALVE ADJUSTING	2					
13	90170-05302	NUT	2					
14	1S7-E2156-00	SHAFT, ROCKER 2	2					

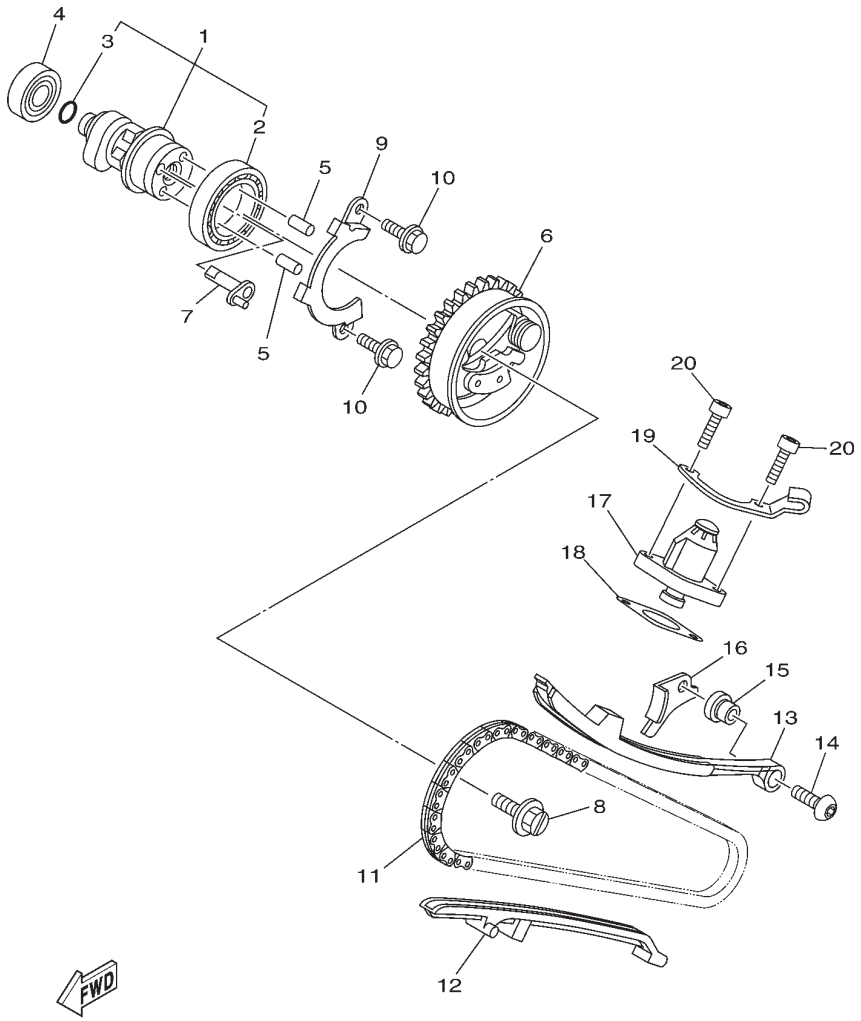

3C11460-F040

FIG. 4 (1N0) CAMSHAFT & CHAIN

REF. NO.	PART NO.	PART NAME	20 P1					REMARKS
1	3C1-E2170-00	CAMSHAFT ASSY 1	1					
2	93306-906Y0	.BEARING	1					
3	93210-09806	.O-RING	1					
4	93306-001X6	BEARING	1					
5	99480-05010	PIN	2					
6	3C1-E2280-00	DECOMPRESSION ASSY	1					
7	1S7-E2288-00	CAM, DECOMPRESSION	1					
8	5YP-E2157-00	BOLT	1					
9	1S7-E111F-00	PLATE	1					
10	95027-06010	BOLT, FLANGE	2					
11	94568-A8096	CHAIN	1					
12	5YP-E2231-00	GUIDE, STOPPER 1	1					
13	3C1-E2241-00	GUIDE, STOPPER 2	1					
14	90149-06829	SCREW	1					
15	3C1-E5598-00	COLLAR	1					
16	3C1-E2256-00	COVER, CHAIN	1					
17	2P2-E2210-00	TENSIONER ASSY, CAM CHAIN	1					
18	5MX-E2213-00	GASKET, TENSIONER CASE	1					
19	3C1-E5441-00	HOLDER, CLUTCH CABLE	1					
20	91317-06020	BOLT	2					

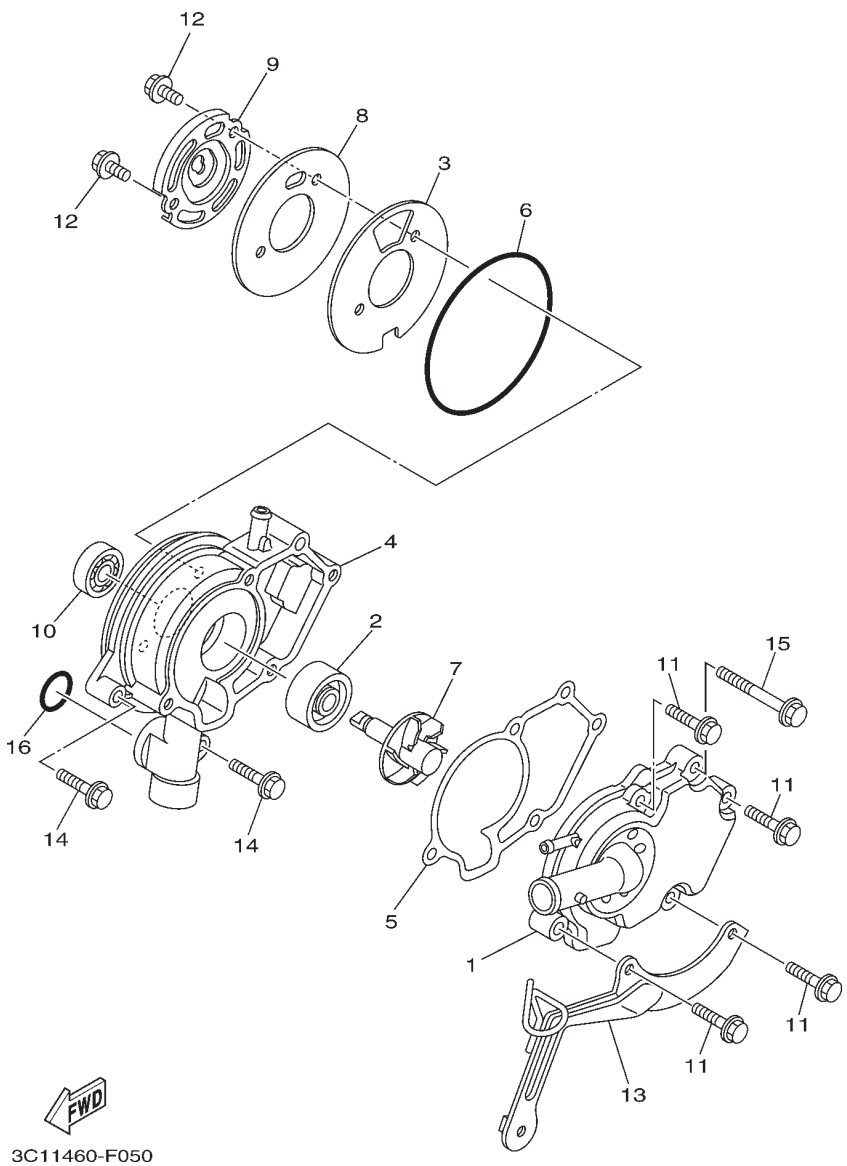

FIG. 5 (1Q0) WATER PUMP

REF. NO.	PART NO.	PART NAME	20 P1					REMARKS
1	3C1-E2422-00	COVER, HOUSING	1					
2	93103-10801	OIL SEAL	1					
3	1S7-E2428-00	GASKET, HOUSING COVER 2	1					
4	1S7-E1185-01	COVER, CYLINDER HEAD SIDE 1	1					
5	1S7-E1196-00	GASKET, CYLINDER HEAD SIDE	1					
6	93210-84801	O-RING	1					
7	1S7-E2450-00	IMPELLER SHAFT ASSY	1					
8	1S7-E1951-00	PLATE	1					
9	1S7-E1952-01	PLATE	1					
10	93306-000Y3	BEARING	1					
11	95027-06025	BOLT, FLANGE	4					
12	95027-06012	BOLT, FLANGE	2					
13	3C1-E2443-00	STAY	1					
14	95027-06025	BOLT, FLANGE	2					
15	95027-06050	BOLT, FLANGE	1					
16	93210-19809	O-RING	1					

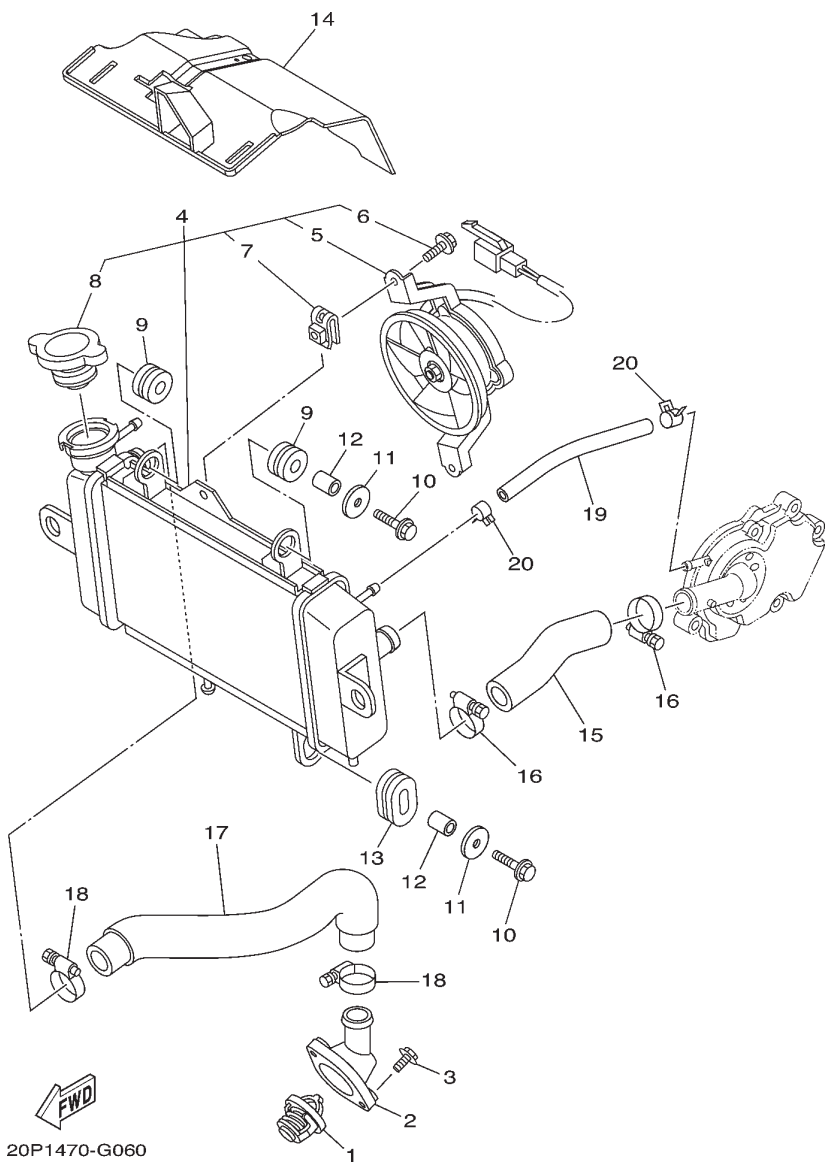

FIG. 6 (1R0) RADIATOR & HOSE

REF. NO.	PART NO.	PART NAME	20 P1					REMARKS
1	5YP-12411-00	THERMOSTAT	1					
2	1S7-E2413-00	COVER, THERMOSTAT	1					
3	95027-06020	BOLT, FLANGE	2					
4	20P-E240A-00	RADIATOR ASSY	1					
5	5YP-E2405-00	.BLOWER ASSY	1					
6	5YP-E2675-00	.BOLT, BLOWER HOLDING	2					
7	5YP-E2671-00	.NUT 1	2					
8	5ST-E2590-00	.CAP, RADIATOR	1					
9	90480-15363	GROMMET	2					
10	95827-06025	BOLT, FLANGE	2					
11	90201-06072	WASHER, PLATE	2					
12	90387-064W3	COLLAR	2					
13	90480-01803	GROMMET	1					
14	20P-E2467-00	COVER, RADIATOR	1					
15	20P-E2481-00	PIPE 1	1					
16	90450-28801	HOSE CLAMP ASSY	2					
17	20P-E2482-00	PIPE 2	1					
18	90450-28801	HOSE CLAMP ASSY	2					
19	90445-12804	HOSE	1					
20	90467-10808	CLIP	2					

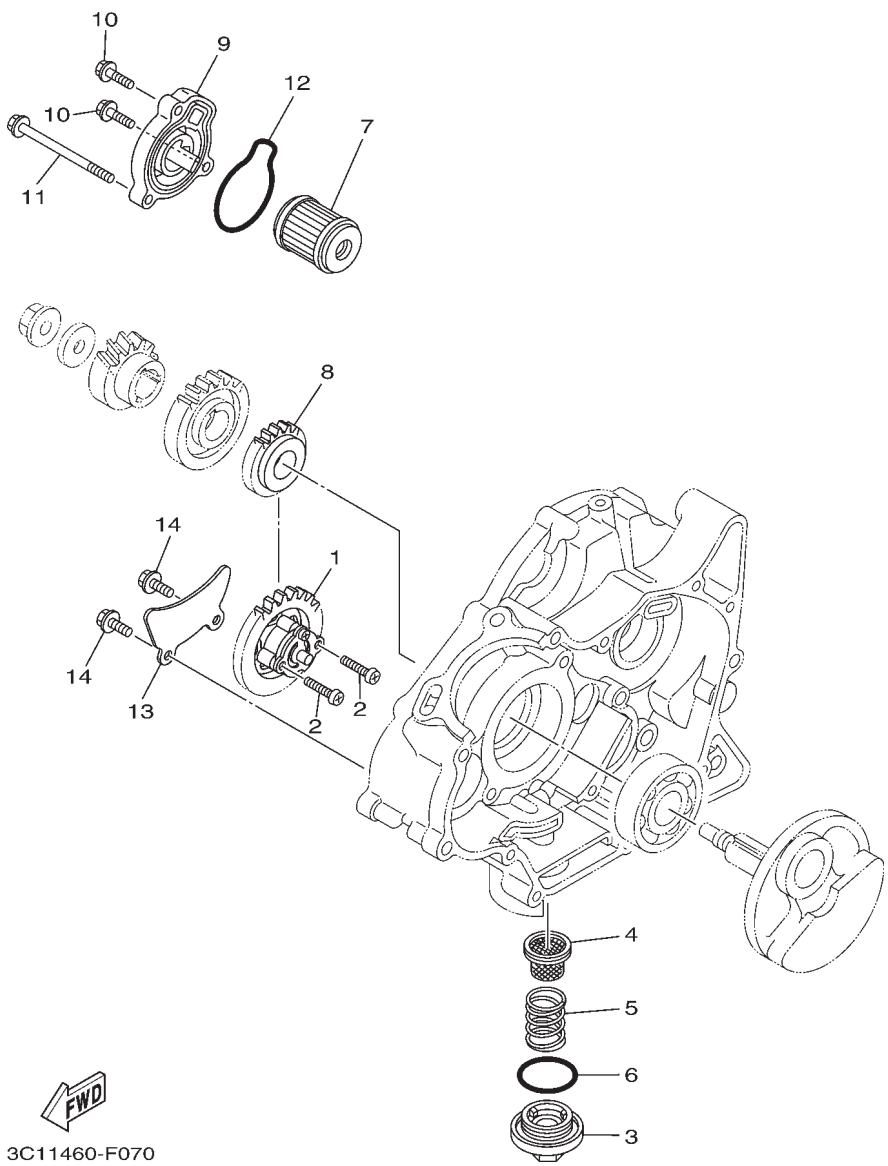

FIG. 7 (2C0) OIL PUMP

REF. NO.	PART NO.	PART NAME	20 P1					REMARKS
1	3C1-E3300-00	OIL PUMP ASSY	1					
2	98507-05025	SCREW, PAN HEAD	2					
3	1S7-E5351-00	PLUG, DRAIN	1					
4	1S7-E3411-00	STRAINER, OIL	1					
5	90501-18576	SPRING, COMPRESSION	1					
6	93210-34802	O-RING	1					
7	1S7-E3440-00	ELEMENT ASSY, OIL CLEANER	1					
8	3C1-E3324-00	GEAR, PUMP DRIVE	1					
9	3C1-E3447-00	COVER, OIL ELEMENT	1					
10	9502L-06020	BOLT, FLANGE	2					
11	9502L-06080	BOLT, FLANGE	1					
12	93210-54805	O-RING	1					
13	3C1-E3327-00	COVER, PUMP GEAR	1					
14	9502L-06012	BOLT, FLANGE	2					

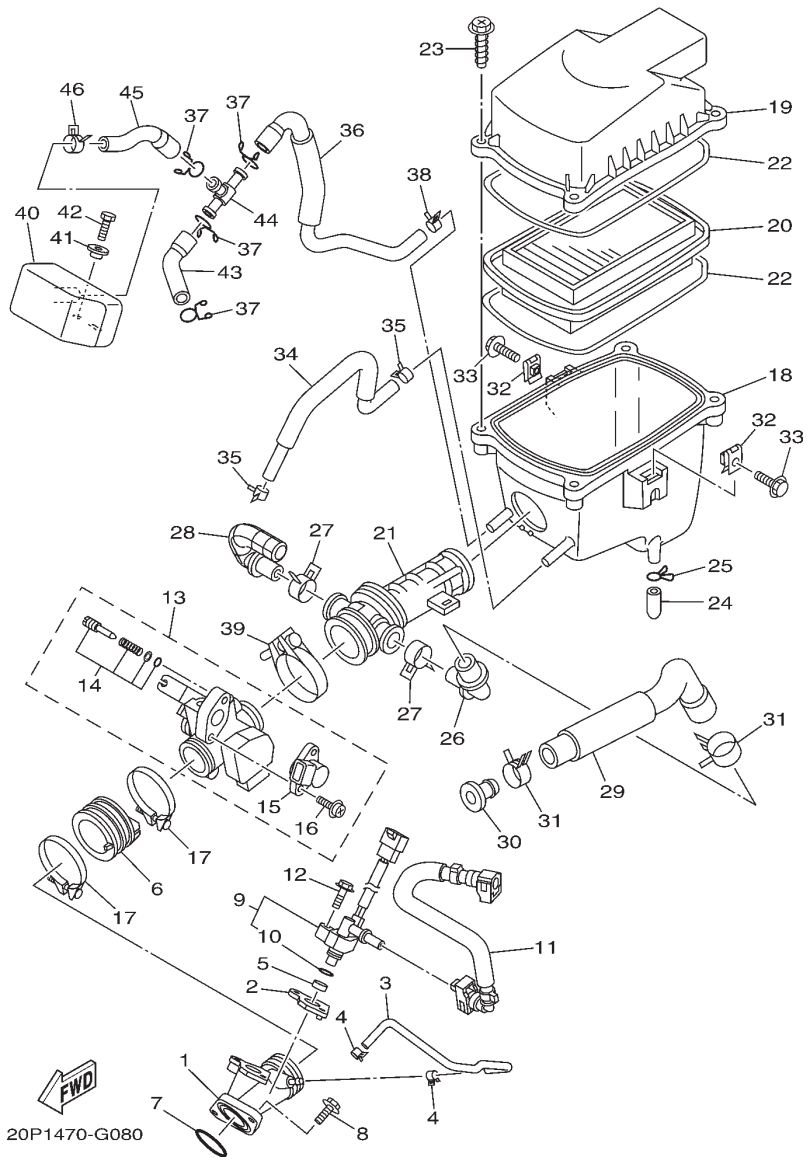

FIG. 8 (2J0) INTAKE

REF. NO.	PART NO.	PART NAME	20 P1					REMARKS
1	3C1-E3585-00	MANIFOLD	1					
2	3C1-E3556-00	GASKET, MANIFOLD	1					
3	3C1-E3542-00	HOSE, VACUUM SENSING 1	1					
4	90467-08092	CLIP	2					
5	90430-09800	GASKET	1					
6	3C1-E3586-00	JOINT, CARBURETOR 1	1					
7	93210-32807	O-RING	1					
8	9502N-06020	BOLT, FLANGE	2					
9	3C1-13770-10	INJECTOR ASSY	1					
10	5CA-14147-00	.O-RING	1					
11	3C1-13971-00	PIPE, FUEL 1	1					
12	95817-06030	BOLT, FLANGE	1					
13	3C1-E3750-00	THROTTLE BODY ASSY	1					
14	5JW-14104-00	.AIR SCREW SET	1					
15	2S5-1410H-00	.FUEL CUT SOLENOID VALVE	1					
16	1S4-14216-00	.SCREW	1					
17	5MX-E3575-01	BAND	2					
18	20P-E4411-00	CASE, AIR CLEANER 1	1					
19	20P-E4412-00	CAP, CLEANER CASE 1	1					
20	20P-E4450-00	ELEMENT ASSY, AIR CLEANER	1					
21	20P-E4453-00	JOINT, AIR CLEANER 1	1					
22	3C1-E4452-00	SEAL	2					
23	90163-05803	SCREW, TAPPING	4					
24	20P-E443E-00	PIPE, DRAIN	1					
25	90467-12800	CLIP	1					
26	20P-E4485-00	PIPE, JOINT	1					
27	90467-20050	CLIP	2					
28	20P-E4419-00	PIPE	1					

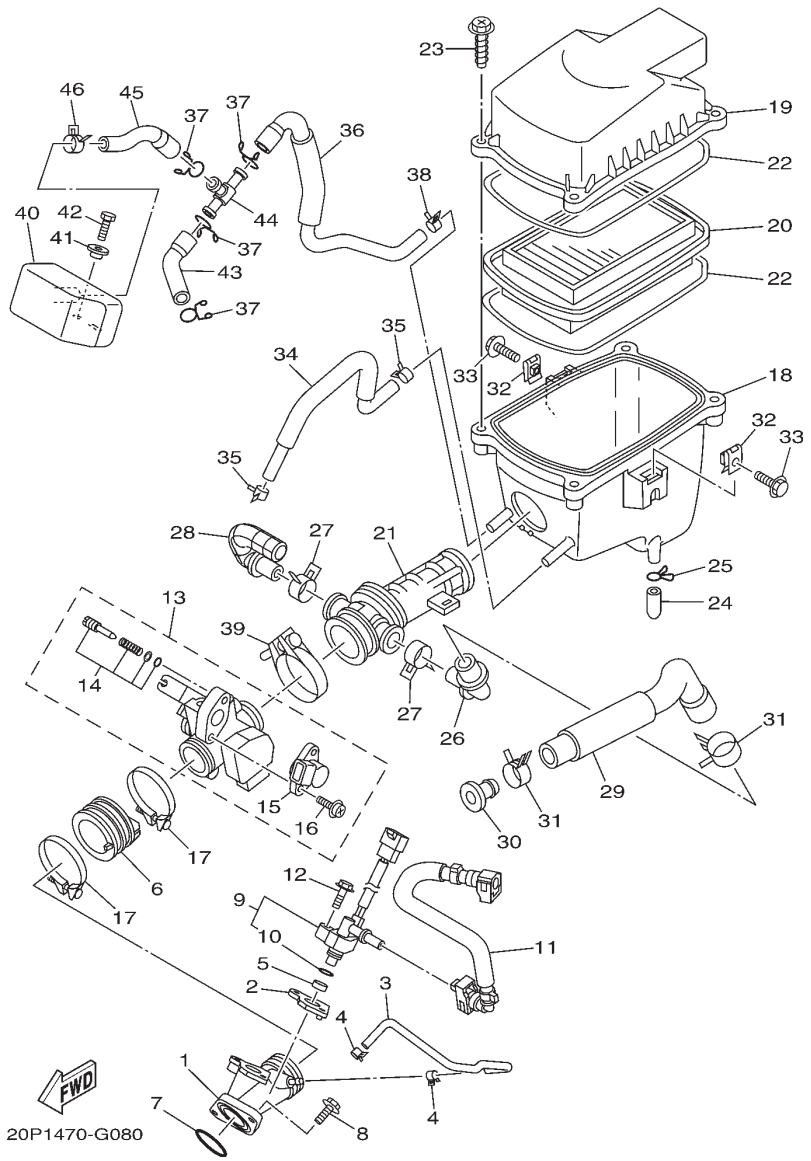

FIG. 8 (2J0) INTAKE

REF. NO.	PART NO.	PART NAME	20 P1					REMARKS
29	20P-E441J-00	PIPE, SILENCER	1					
30	90338-16008	PLUG	1					
31	90467-23059	CLIP	2					
32	90183-06023	NUT, SPRING	2					
33	90119-06051	BOLT, WITH WASHER	2					
34	20P-E1166-00	PIPE, BREATHER 1	1					
35	90467-13816	CLIP	2					
36	20P-E4882-00	HOSE, BEND 2	1					
37	90467-15012	CLIP	4					
38	90467-13802	CLIP	1					
39	90450-39804	HOSE CLAMP ASSY	1					
40	20P-E4877-00	RESONATOR	1					
41	90387-068S1	COLLAR	2					
42	97027-06014	BOLT, HEXAGON	2					
43	20P-E4881-00	HOSE, BEND 1	1					
44	90413-13800	WAY 3	1					
45	20P-E4883-00	HOSE, BEND 3	1					
46	90467-16800	CLIP	1					

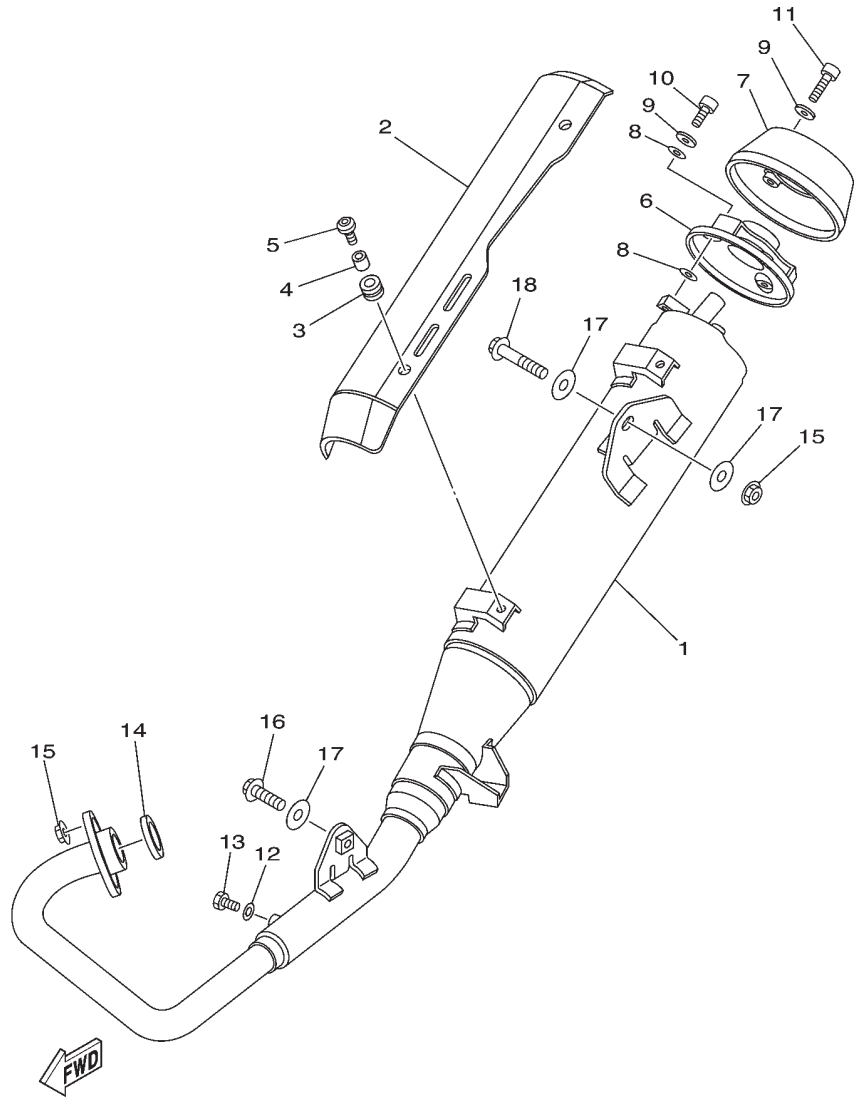

20P1470-G090

FIG. 9 (2N0) EXHAUST

REF. NO.	PART NO.	PART NAME	20 P1					REMARKS
1	20P-E4703-00	MUFFLER COMP. 1	1					
2	20P-E4728-00	PROTECTOR, MUFFLER 2	1					
3	90480-12581	GROMMET	4					
4	90387-06023	COLLAR	4					
5	90149-06264	SCREW	4					
6	20P-E4629-00	STAY, PROTECTOR	1					
7	20P-E4799-00	CAP	1					
8	5GM-14766-00	WASHER, PROTECTOR	6					
9	92990-06200	WASHER, PLAIN	6					
10	91380-06012	BOLT	3					
11	91380-06016	BOLT	3					
12	92990-06600	WASHER, PLATE	1					
13	97080-06008	BOLT	1					
14	21C-E4613-00	GASKET, EXHAUST PIPE	1					
15	95707-08500	NUT, FLANGE	3					
16	95817-08025	BOLT, FLANGE	1					
17	90201-08612	WASHER, PLATE	3					
18	95817-08040	BOLT, FLANGE	1					

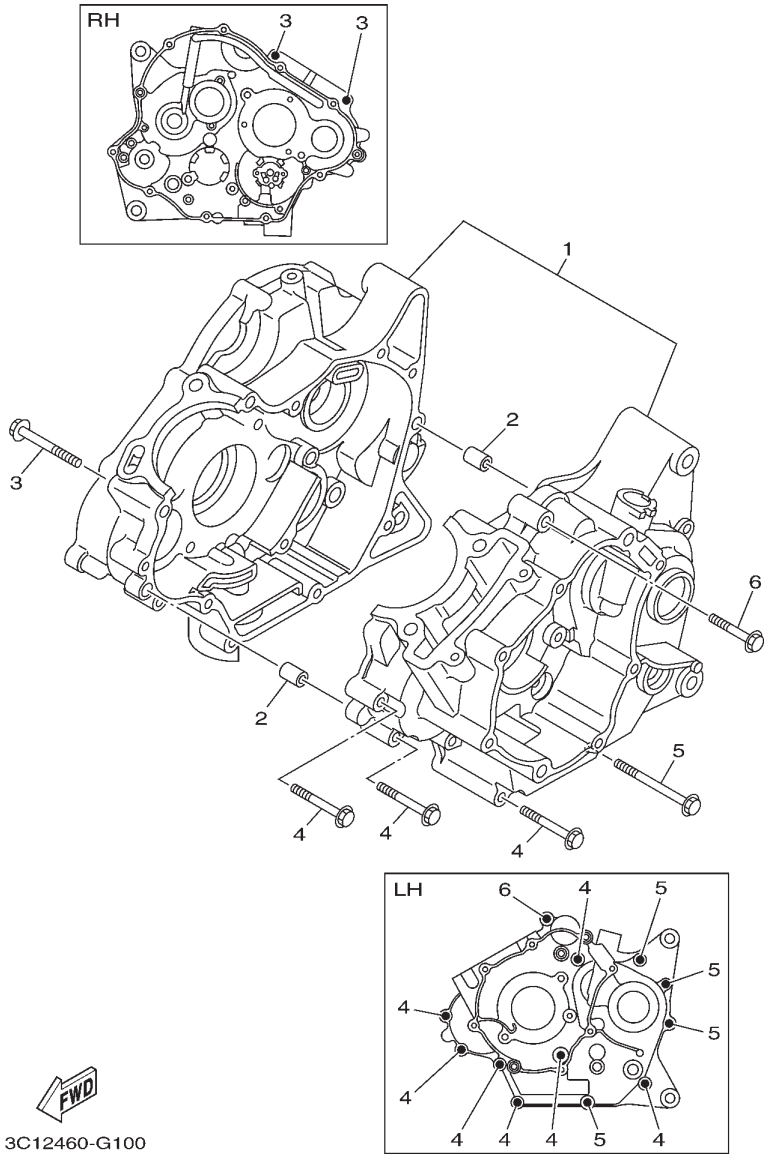

FIG. 10 (2R0) CRANKCASE

REF. NO.	PART NO.	PART NAME	20 P1					REMARKS
1	3C1-E5150-01	CRANKCASE ASSY	1					
2	91810-14809	PIN, DOWEL	2					
3	9502L-06055	BOLT, FLANGE	2					
4	9502L-06045	BOLT, FLANGE	7					
5	9502L-06070	BOLT, FLANGE	4					
6	9502L-06040	BOLT, FLANGE	1					

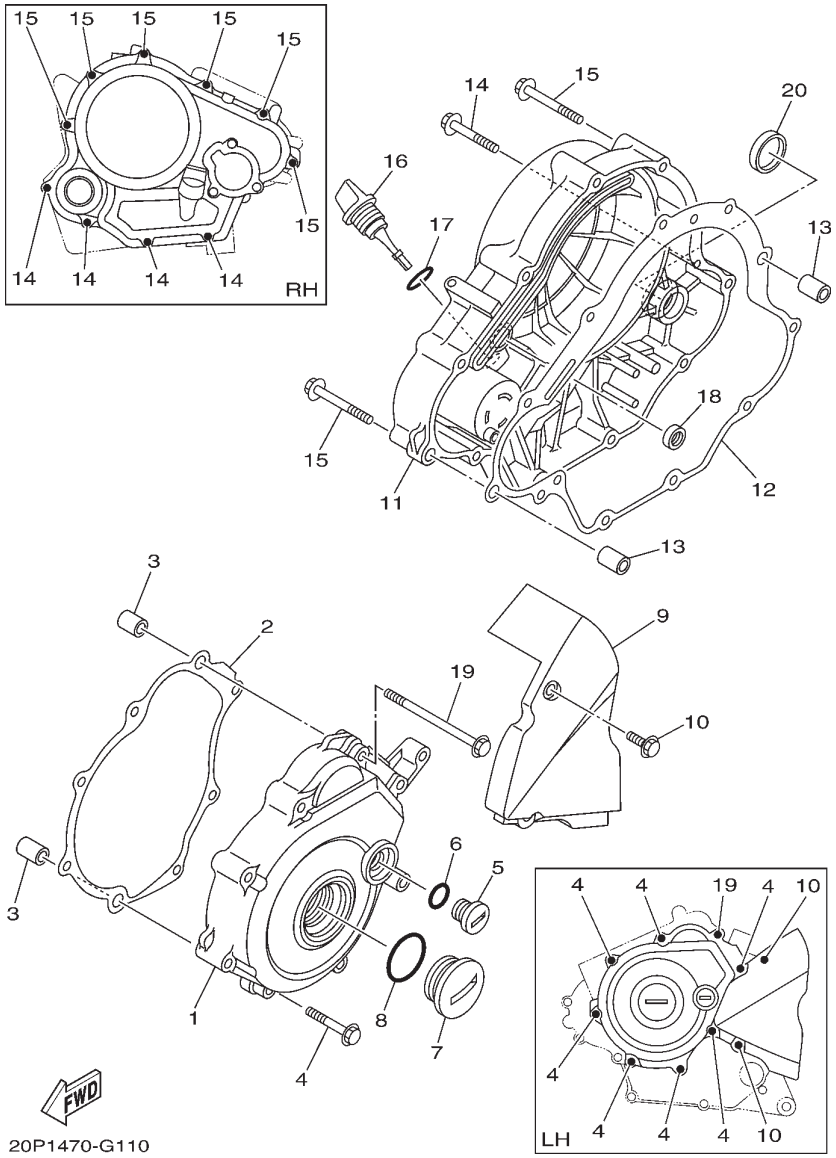

FIG. 11 (2S0) CRANKCASE COVER 1

REF. NO.	PART NO.	PART NAME	20 P1					REMARKS
1	3C1-E5411-00	COVER, CRANKCASE 1	1					
2	3C1-E5451-00	GASKET, CRANKCASE COVER 1	1					
3	91810-14809	PIN, DOWEL	2					
4	9502L-06040	BOLT, FLANGE	7					
5	90340-14805	PLUG, STRAIGHT SCREW	1					
6	93210-148F8	O-RING	1					
7	90340-32810	PLUG, STRAIGHT SCREW	1					
8	93210-328G3	O-RING	1					
9	20P-E5418-00	COVER, CHAIN CASE	1					
10	95022-06016	BOLT, FLANGE	2					
11	3C1-E5421-00	COVER, CRANKCASE 2	1					
12	3C1-E5461-00	GASKET, CRANKCASE COVER 2	1					
13	91810-14809	PIN, DOWEL	2					
14	9502L-06040	BOLT, FLANGE	4					
15	9502L-06050	BOLT, FLANGE	6					
16	3C1-E5362-00	PLUG, OIL LEVEL	1					
17	93210-198F9	O-RING	1					
18	93101-10843	OIL SEAL	1					
19	9502L-06090	BOLT, FLANGE	1					
20	90338-30802	PLUG	1					

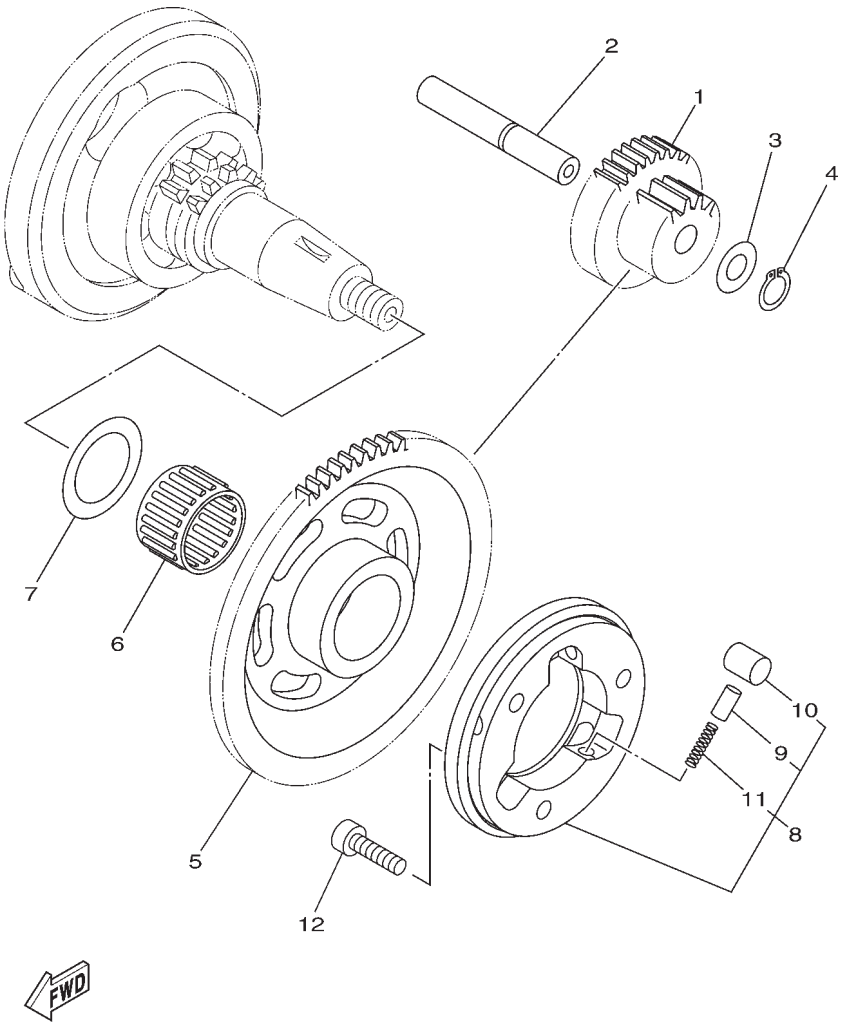

3C11460-F130

FIG. 12 (2V0) STARTER CLUTCH

REF. NO.	PART NO.	PART NAME	20 P1					REMARKS
1	3C1-E5514-00	GEAR 2	1					
2	3C1-E5521-00	SHAFT 1	1					
3	90201-105E8	WASHER, PLATE	1					
4	99009-10400	CIRCLIP	1					
5	3C1-E5524-00	WHEEL, STARTER	1					
6	93310-325X1	BEARING	1					
7	90201-25290	WASHER, PLATE	1					
8	5YP-E5580-00	STARTER CLUTCH OUTER ASSY	1					
9	5HV-E5583-00	.CAP, STARTER CLUTCH SPRING	3					
10	5YP-E5614-00	.PIN, DOWEL	3					
11	90501-030A0	.SPRING, COMPRESSION	3					
12	91317-06020	BOLT	3					

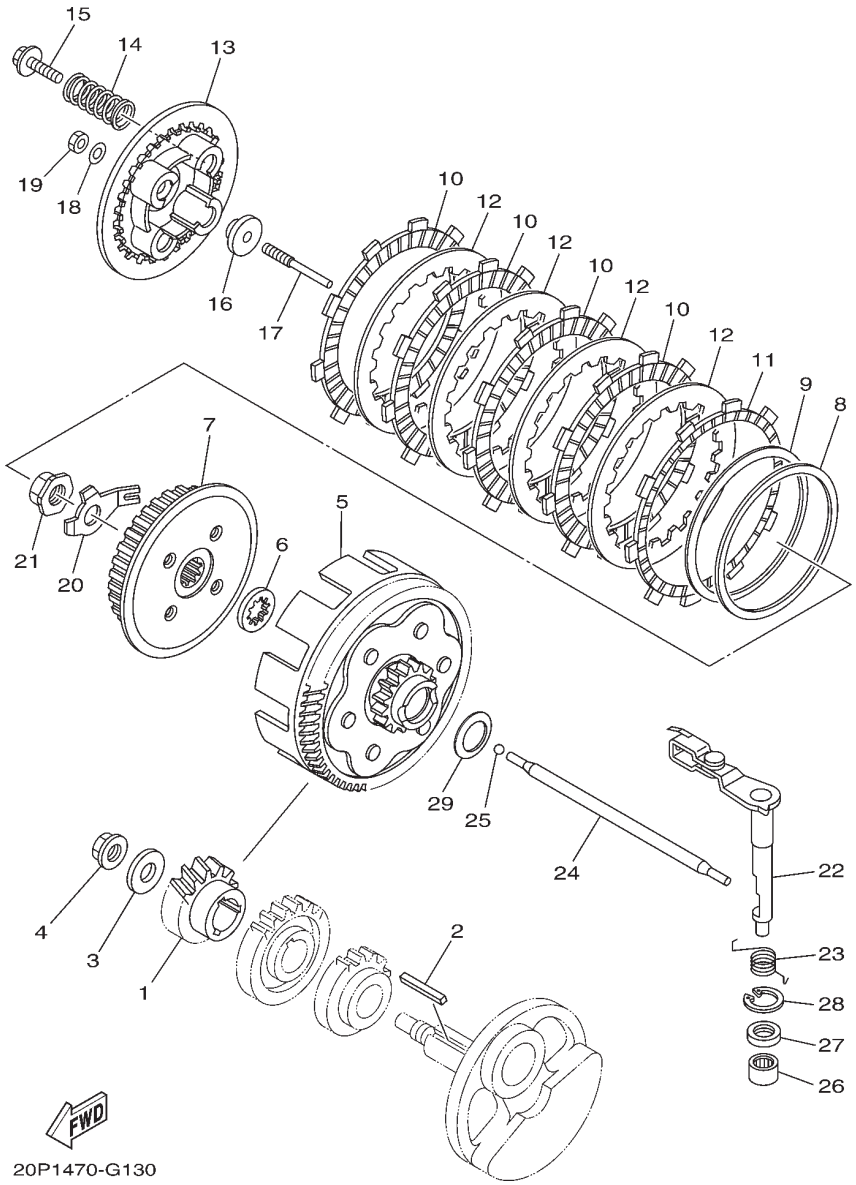

FIG. 13 (2X0) CLUTCH

REF. NO.	PART NO.	PART NAME	20 P1					REMARKS
1	3C1-E6111-00	GEAR, PRIMARY DRIVE	1					
2	3C1-16193-00	KEY, FEATHER	1					
3	90201-12019	WASHER, PLATE	1					
4	90179-12802	NUT	1					
5	3C1-E6150-00	PRIMARY DRIVEN GEAR COMP.	1					
6	3C1-E6154-00	PLATE, THRUST 1	1					
7	3C1-E6371-00	BOSS, CLUTCH	1					
8	3C1-E6384-00	PLATE, SEAT	1					
9	3C1-E6383-00	SPRING, CLUTCH BOSS	1					
10	3C1-E6307-00	PLATE, FRICTION 3	4					
11	20P-E6331-00	PLATE, FRICTION 2	1					
12	3C1-E6324-00	PLATE, CLUTCH 1	4					
13	3C1-E6351-00	PLATE, PRESSURE 1	1					
14	20P-E6333-00	SPRING, CLUTCH 1	4					
15	3C1-E6337-00	SCREW, SPRING	4					
16	3C1-E6358-00	PLATE, PUSH	1					
17	20P-E6356-00	ROD, PUSH 1	1					
18	3C1-E6144-00	WASHER	1					
19	3C1-E6344-00	NUT, ADJUSTING	1					
20	3C1-E6135-00	WASHER, LOCK	1					
21	90179-14001	NUT	1					
22	3C1-16380-01	PUSH LEVER ASSY	1					
23	3C1-E6345-00	SPRING, RETURN	1					
24	3C1-16357-01	ROD, PUSH 2	1					
25	93503-16048	BALL	1					
26	93315-112Y8	BEARING	1					
27	93102-12862	OIL SEAL	1					
28	99009-20500	CIRCLIP	1					
29	90208-20003	WASHER, CONICAL SPRING	1					

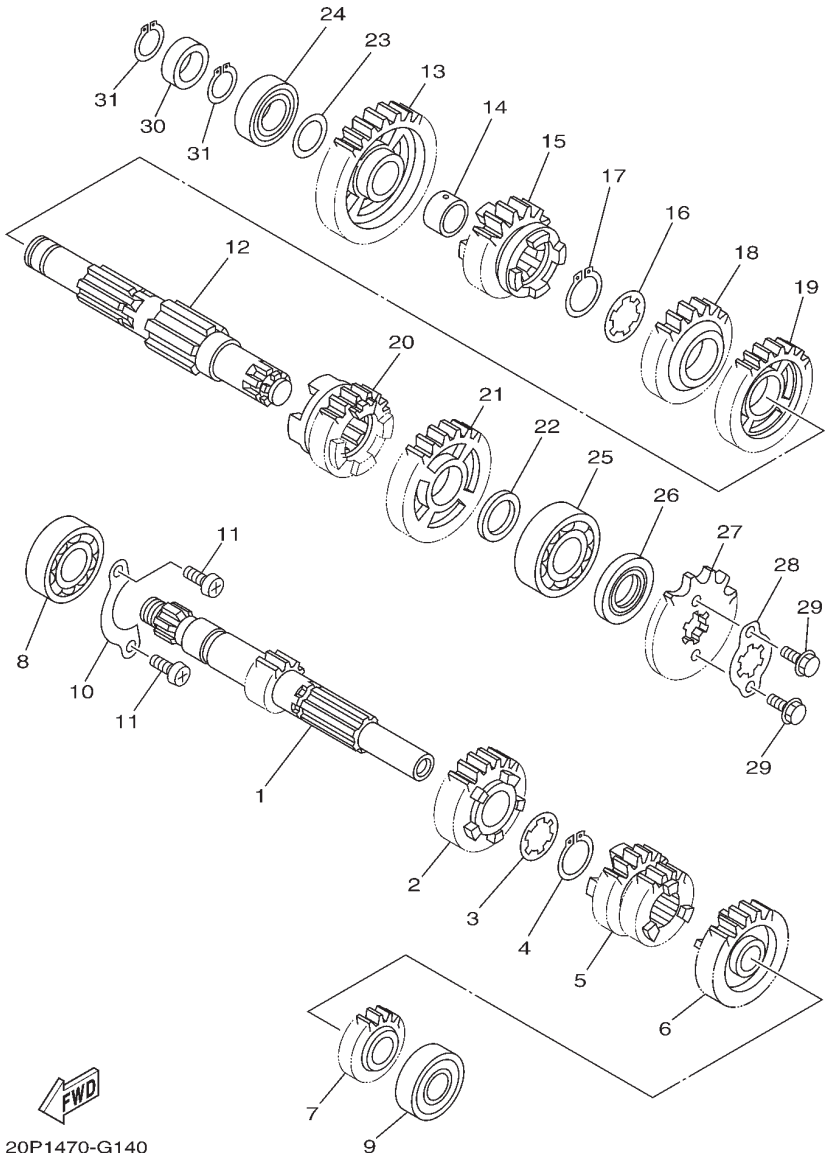

FIG. 14 (2Z0) TRANSMISSION

REF. NO.	PART NO.	PART NAME	20 P1					REMARKS
1	5D7-E7411-00	AXLE, MAIN	1					
2	3C1-E7151-00	GEAR, 5TH PINION (23T)	1					
3	90209-17285	WASHER	1					
4	93410-20038	CIRCLIP	1					
5	5D7-E7131-00	GEAR, 3RD PINION	1					
6	5D7-E7161-00	GEAR, 6TH PINION	1					
7	3C1-E7121-00	GEAR, 2ND PINION (16T)	1					
8	93306-004XR	BEARING	1					
9	93306-252YL	BEARING	1					
10	3C1-E7471-00	PLATE, COVER	1					
11	98517-06012	SCREW, PAN HEAD	2					
12	3C1-E7402-00	DRIVE AXLE ASSY	1					
13	3C1-E7211-00	GEAR, 1ST WHEEL (34T)	1					
14	90387-17804	COLLAR	1					
15	3C1-E7251-00	GEAR, 5TH WHEEL (22T)	1					
16	90209-18208	WASHER	1					
17	93410-22039	CIRCLIP	1					
18	3C1-E7241-00	GEAR, 4TH WHEEL (24T)	1					
19	3C1-E7231-00	GEAR, 3RD WHEEL (30T)	1					
20	5D7-E7261-00	GEAR, 6TH WHEEL	1					
21	3C1-E7221-00	GEAR, 2ND WHEEL (30T)	1					
22	90201-20814	WASHER, PLATE	1					
23	90201-173F4	WASHER, PLATE	1					
24	93306-003Y7	BEARING	1					
25	93306-204YL	BEARING	1					
26	93102-20892	OIL SEAL	1					
27	93822-14815	SPROCKET, DRIVE (14T)	1					
28	3C1-E7456-00	HOLDER, SPROCKET	1					
29	95027-06010	BOLT, FLANGE	2					
30	20P-E5666-00	SPACER	1					
31	99009-17400	CIRCLIP	2					

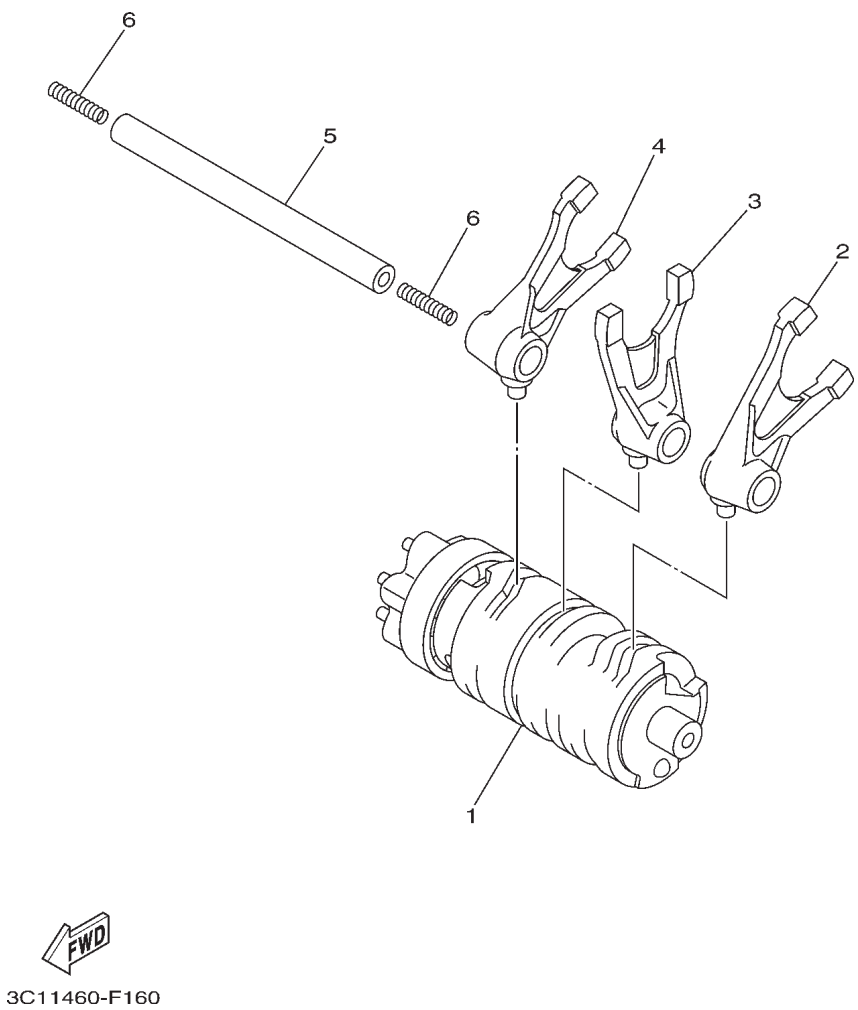

FIG. 15 (3J0) SHIFT CAM & FORK

REF. NO.	PART NO.	PART NAME	20 P1					REMARKS
1	5D7-E8540-00	SHIFT CAM ASSY	1					
2	3C1-E8511-00	FORK, SHIFT 1	1					
3	3C1-E8512-00	FORK, SHIFT 2	1					
4	3C1-E8513-00	FORK, SHIFT 3	1					
5	3C1-E8531-00	BAR, SHIFT FORK GUIDE 1	1					
6	90501-06800	SPRING, COMPRESSION	2					

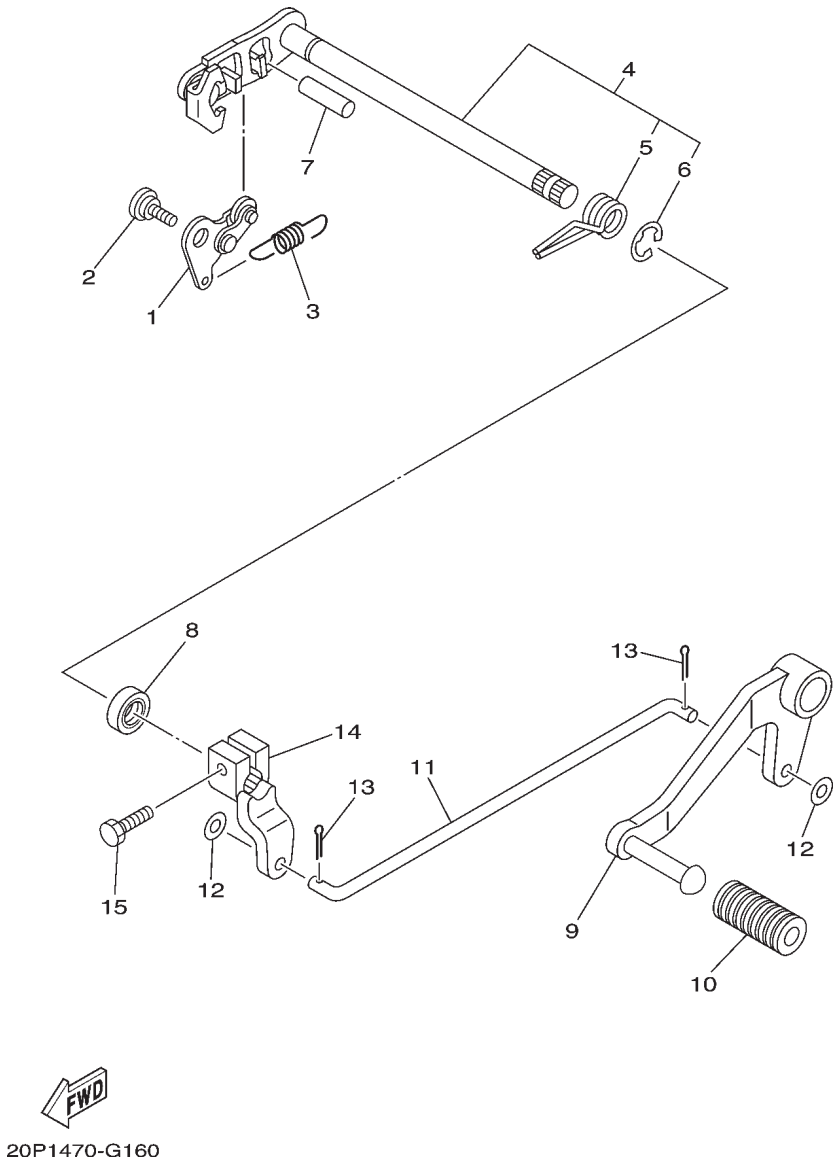

FIG. 16 (3K0) SHIFT SHAFT

REF. NO.	PART NO.	PART NAME	20 P1					REMARKS
1	3C1-E8140-00	STOPPER LEVER ASSY	1					
2	3C1-E8119-00	BOLT, SHIFT	1					
3	3C1-E8337-00	SPRING	1					
4	3C1-E8101-00	SHIFT SHAFT ASSY	1					
5	90508-32837	.SPRING, TORSION	1					
6	99001-10600	.CIRCLIP	1					
7	93608-30839	PIN, DOWEL	1					
8	93102-12891	OIL SEAL	1					
9	20P-E8111-00	PEDAL, SHIFT	1					
10	20P-E8113-00	COVER, SHIFT PEDAL	1					
11	20P-E8115-00	ROD, SHIFT	1					
12	92907-06200	WASHER	2					
13	91401-20012	PIN, COTTER	2					
14	20P-E8112-00	ARM, SHIFT	1					
15	97024-06020	BOLT	1					

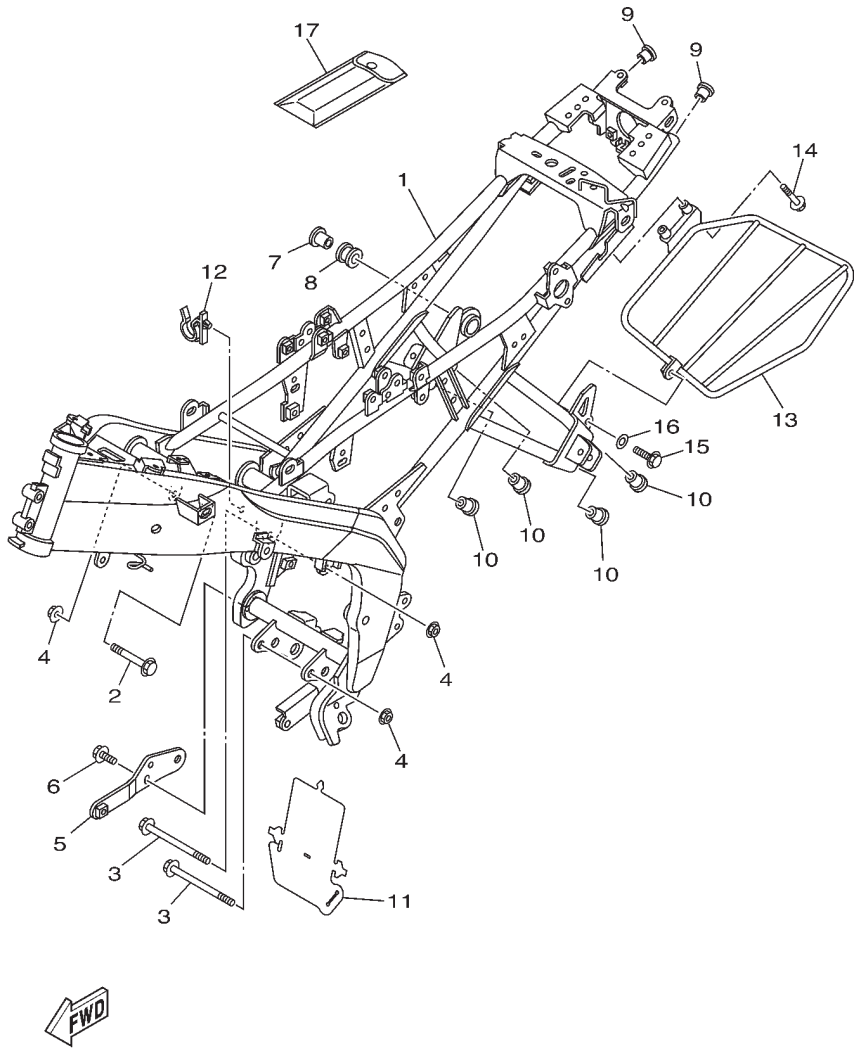

20P1470-G170

FIG. 17 (3M0) FRAME

REF. NO.	PART NO.	PART NAME	20 P1					REMARKS
1	20P-F1110-00	FRAME COMP.	1					
2	90105-10323	BOLT, FLANGE	1					
3	90105-10123	BOLT, FLANGE	2					
4	90179-10247	NUT	3					
5	20P-F8284-00	BRACKET, UNDER	1					
6	95817-08016	BOLT, FLANGE	2					
7	90387-08812	COLLAR	1					
8	20P-E4747-00	DAMPER, MUFFLER	1					
9	90338-18122	PLUG	2					
10	90338-16148	PLUG	4					
11	20P-F2327-00	MUD GUARD 1	1					
12	20P-F1338-00	CLAMP	1					
13	20P-F162S-00	GUARD, DRESS	1					
14	95817-06025	BOLT, FLANGE	2					
15	95817-06014	BOLT, FLANGE	1					
16	90201-061A5	WASHER, PLATE	1					
17	20P-F8100-00	TOOL KIT	1					

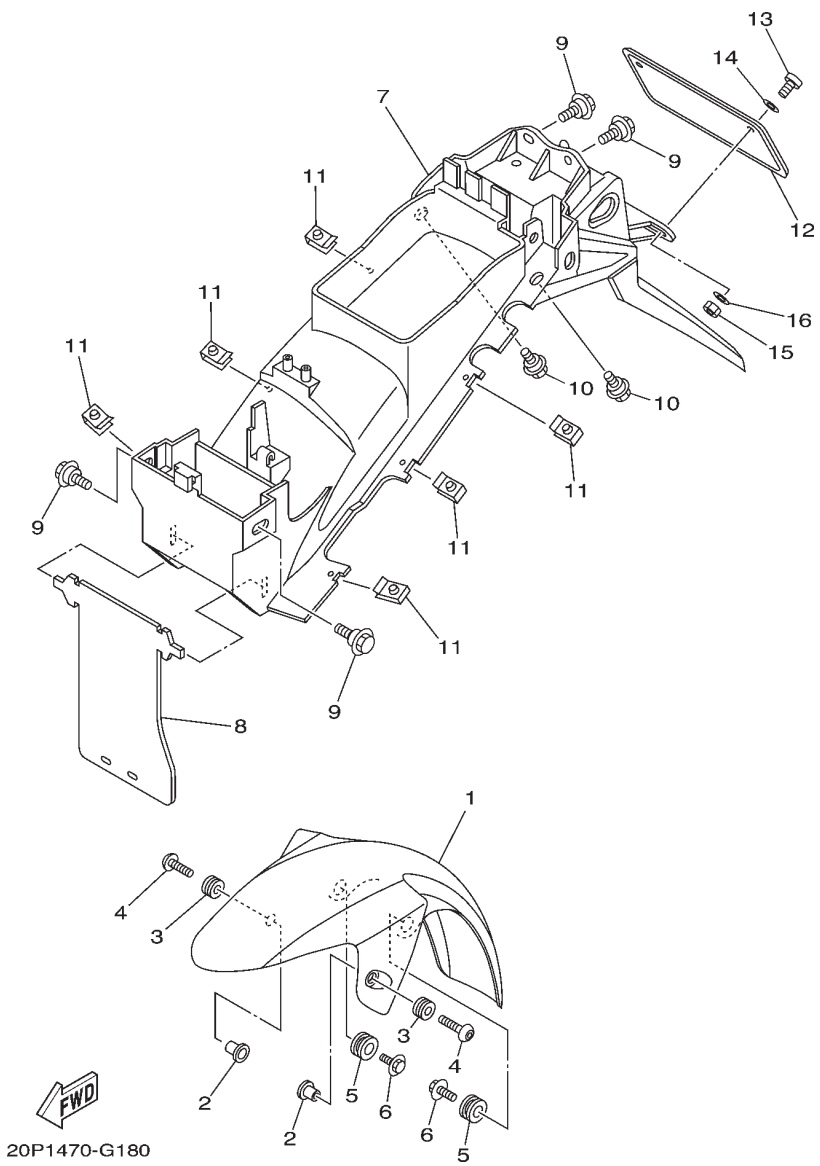

FIG. 18 (3Q0) FENDER

REF. NO.	PART NO.	PART NAME	20 P1					REMARKS
1	20P-F1511-00-P0	FENDER, FRONT	1					UR FOR DPBMY
	20P-F1511-00-P1	FENDER, FRONT	1					UR FOR SMX
2	90387-068C8	COLLAR	2					
3	90480-12805	GROMMET	2					
4	90111-06117	BOLT,HEX. SOCKET BUTTON	2					
5	90480-18859	GROMMET	2					
6	90119-06233	BOLT, WITH WASHER	2					
7	20P-F1611-00	FENDER, REAR	1					
8	20P-F1621-00	FLAP	1					
9	90109-063F1	BOLT	4					
10	90109-06183	BOLT	2					
11	90183-05042	NUT, SPRING	6					
12	5TS-F1681-20	PLATE, LICENSE	1					
13	98507-06014	SCREW, PAN HEAD	2					
14	92907-06600	WASHER, PLATE	2					
15	95307-06600	NUT	2					
16	90201-06557	WASHER, PLATE	2					

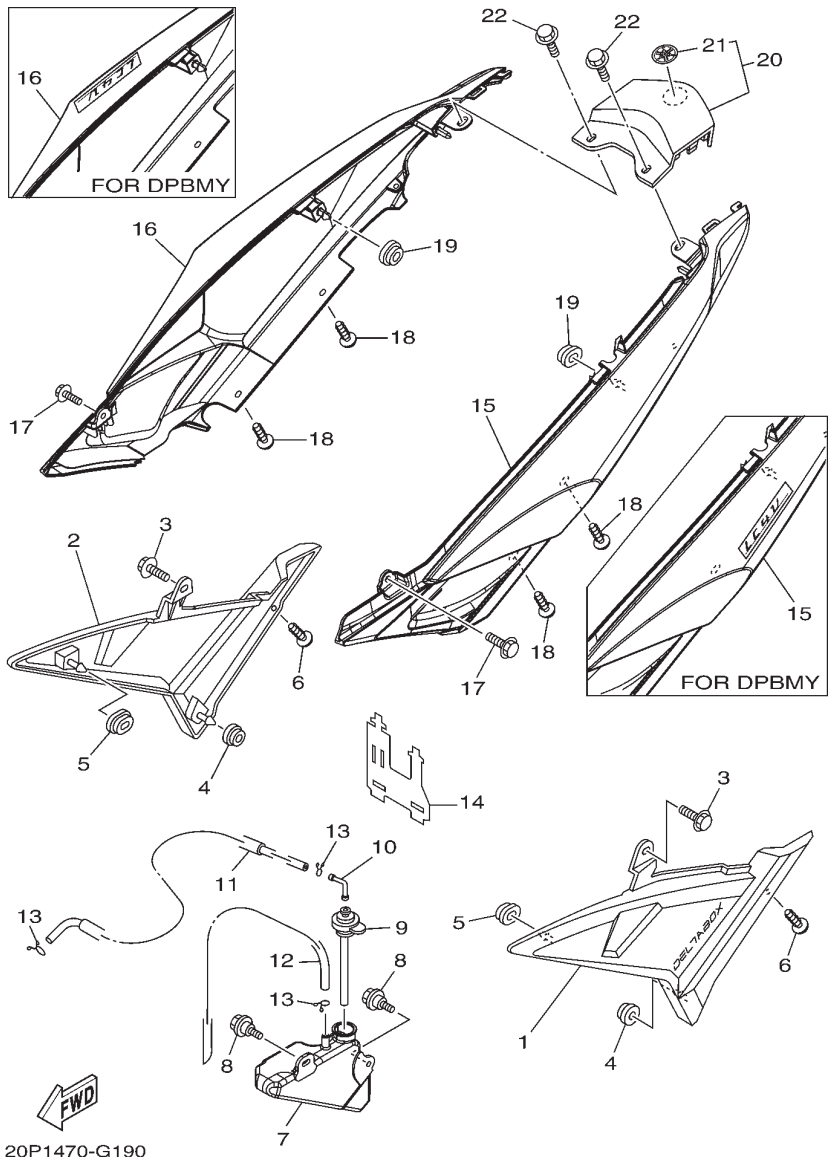

FIG. 19 (3U0) SIDE COVER

REF. NO.	PART NO.	PART NAME	20 P1					REMARKS
1	20P-XF171-00-00	COVER, SIDE 1	1					UR FOR DPBMY
	20P-XF171-10-00	COVER, SIDE 1	1					UR FOR SMX
2	20P-XF172-00-00	COVER, SIDE 2	1					UR FOR DPBMY
	20P-XF172-10-00	COVER, SIDE 2	1					UR FOR SMX
3	90119-06044	BOLT, WITH WASHER	2					
4	90480-13567	GROMMET	2					
5	90480-01558	GROMMET	2					
6	97707-50014	SCREW, TRUSS HEAD TAPPING	2					
7	20P-F1871-00	TANK, RECOVERY	1					
8	90109-06183	BOLT	2					
9	20P-F1875-00	CAP	1					
10	20P-F1828-00	ELBOW	1					
11	90445-08831	HOSE	1					
12	90445-08832	HOSE	1					
13	90467-08003	CLIP	3					
14	20P-F1823-00	CLAMP, HOSE	1					
15	20P-XF173-00-P0	COVER, SIDE 3	1					UR FOR DPBMY
	20P-F1731-00-P1	COVER, SIDE 3	1					UR FOR SMX
16	20P-XF174-00-P0	COVER, SIDE 4	1					UR FOR DPBMY
	20P-F1741-00-P1	COVER, SIDE 4	1					UR FOR SMX
17	90119-06044	BOLT, WITH WASHER	2					
18	97707-50014	SCREW, TRUSS HEAD TAPPING	4					
19	90480-01558	GROMMET	2					
20	20P-XF171-00-P0	COVER, SIDE 1	1					UR FOR DPBMY
	20P-XF171-00-P1	COVER, SIDE 1	1					UR FOR SMX
21	20P-F836B-00	.TUNING FORK MARK	1					
22	90119-06044	BOLT, WITH WASHER	2					

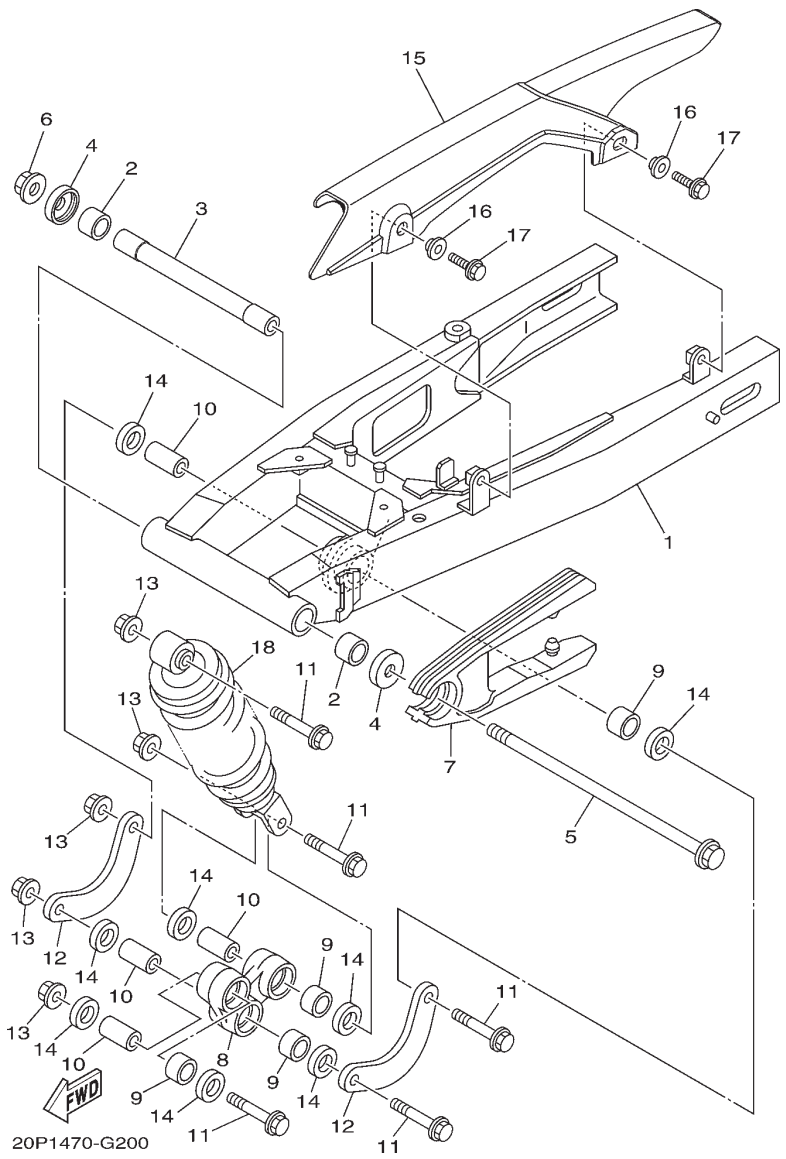

FIG. 20 (4A0) REAR ARM & SUSPENSION

REF. NO.	PART NO.	PART NAME	20P1					REMARKS
1	20P-F2110-00	REAR ARM COMP.	1					
2	93317-21717	BEARING	2					
3	20P-F2184-00	BUSH	1					
4	20P-F2129-00	COVER, THRUST 2	2					
5	20P-F2141-00	SHAFT, PIVOT	1					
6	95707-12500	NUT, FLANGE	1					
7	20P-F2151-00	SEAL, GUARD	1					
8	20P-F217A-00	ARM, RELAY	1					
9	93315-31758	BEARING	4					
10	90387-10814	COLLAR	4					
11	90105-10311	BOLT, FLANGE	5					
12	20P-F217F-00	ROD, CONNECTING 1	2					
13	90179-10023	NUT	5					
14	93106-17802	OIL SEAL	8					
15	20P-F2311-00	CASE, CHAIN	1					
16	90387-07819	COLLAR	2					
17	95827-06014	BOLT, FLANGE	2					
18	20P-F2210-00	SHOCK ABSORBER ASSY, REAR	1					

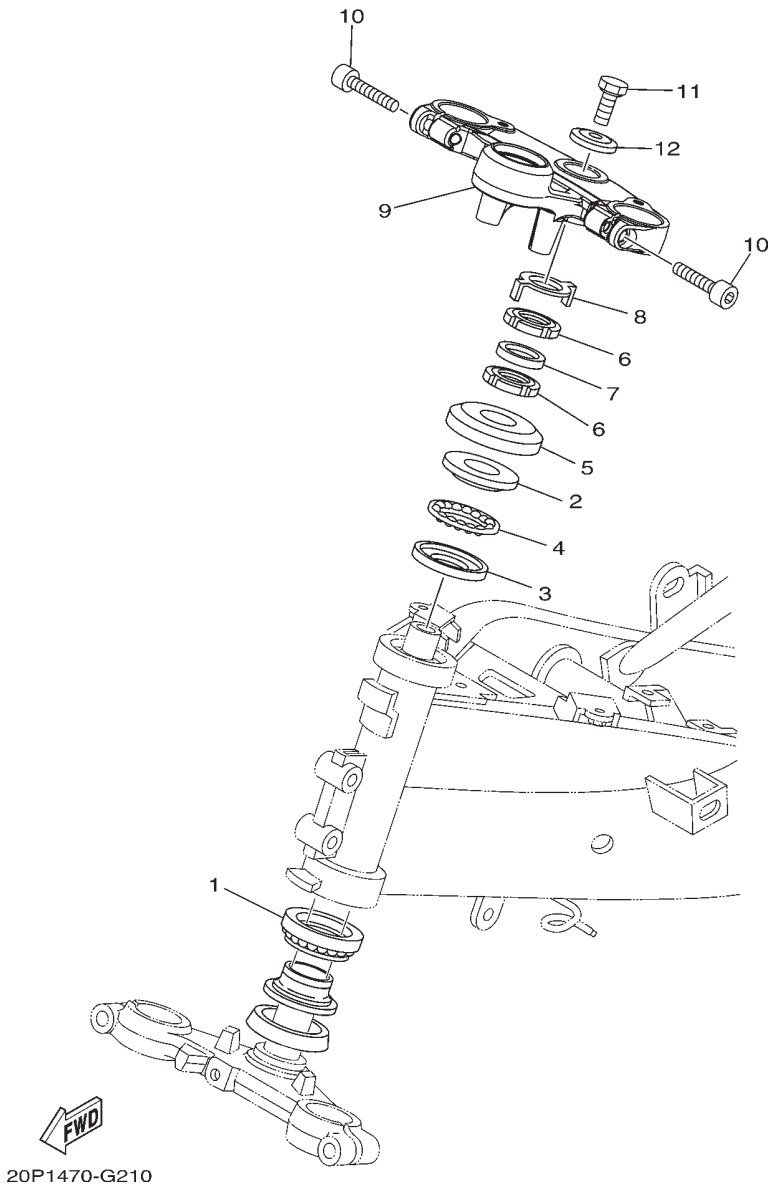

FIG. 21 (4H0) STEERING

REF. NO.	PART NO.	PART NAME	20P1					REMARKS
1	5LK-23873-01	BEARING, STEERING UPPER	1					
2	183-23411-00	RACE, BALL 1	1					
3	183-23412-00	RACE, BALL 2	1					
4	5TL-2341E-00	RETAINER, BALL BEARING	1					
5	20P-F3416-00	COVER, BALL RACE 2	1					
6	90179-25615	NUT	2					
7	90202-26142	WASHER, PLATE	1					
8	20P-F3418-00	WASHER, SPECIAL	1					
9	20P-F3435-00	CROWN, HANDLE	1					
10	91317-08030	BOLT	2					
11	90105-10006	BOLT, FLANGE	1					
12	90209-10020	WASHER	1					

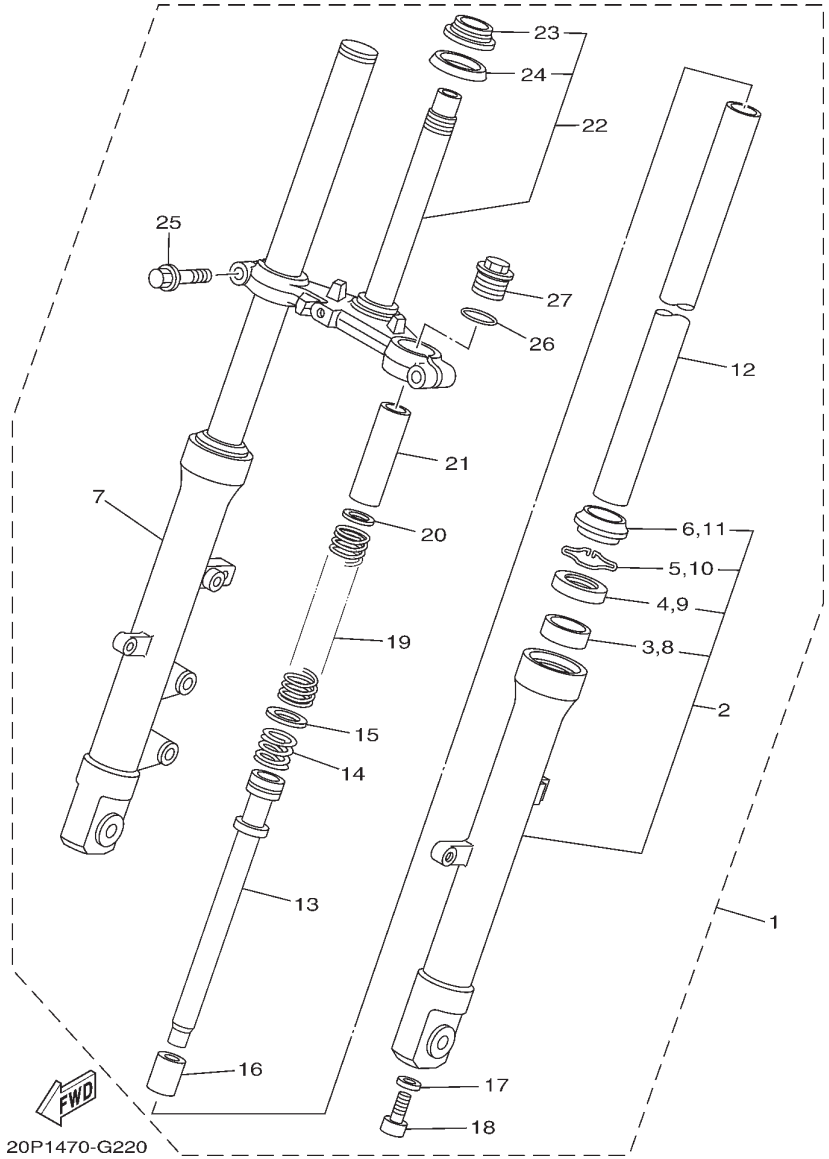

FIG. 22 (4K0) FRONT FORK

REF. NO.	PART NO.	PART NAME	20P1					REMARKS
1	20P-F3100-00	FRONT FORK ASSY	1					
2	20P-F3126-00	.TUBE, OUTER (LEFT)	1					
3	20P-F3125-00	..METAL, SLIDE 1	1					
4	20P-F3145-00	..OIL SEAL	1					
5	20P-F3156-00	..RING, SNAP	1					
6	20P-F3144-00	..SEAL, DUST	1					
7	20P-F3136-00	.TUBE, OUTER (RIGHT)	1					
8	20P-F3125-00	..METAL, SLIDE 1	1					
9	20P-F3145-00	..OIL SEAL	1					
10	20P-F3156-00	..RING, SNAP	1					
11	20P-F3144-00	..SEAL, DUST	1					
12	20P-F3110-00	.INNER TUBE COMP.1	2					
13	20P-F3170-00	.CYLINDER COMP., FRONT FORK	2					
14	20P-F3151-00	.SPRING, REBOUND	2					
15	20P-F3157-00	.RING, PISTON	2					
16	20P-F3173-00	.SPINDLE, TAPER	2					
17	20P-F3158-00	.GASKET	2					
18	20P-F3181-00	.BOLT, HEXAGON SOCKET HEAD	2					
19	20P-F3141-00	.SPRING, FRONT FORK	2					
20	20P-F3149-00	.WASHER, SPRING UPPER	2					
21	20P-F3118-00	.SPACER	2					
22	20P-F3340-00	.UNDER BRACKET COMP.	1					
23	5LK-23875-00	..BEARING, STEERING LOWER	1					
24	164-23462-00	..SEAL, DUST	1					
25	20P-F3346-00	.BOLT 1	2					
26	20P-F3114-00	.GASKET	2					
27	20P-F3111-00	.BOLT, CAP	2					

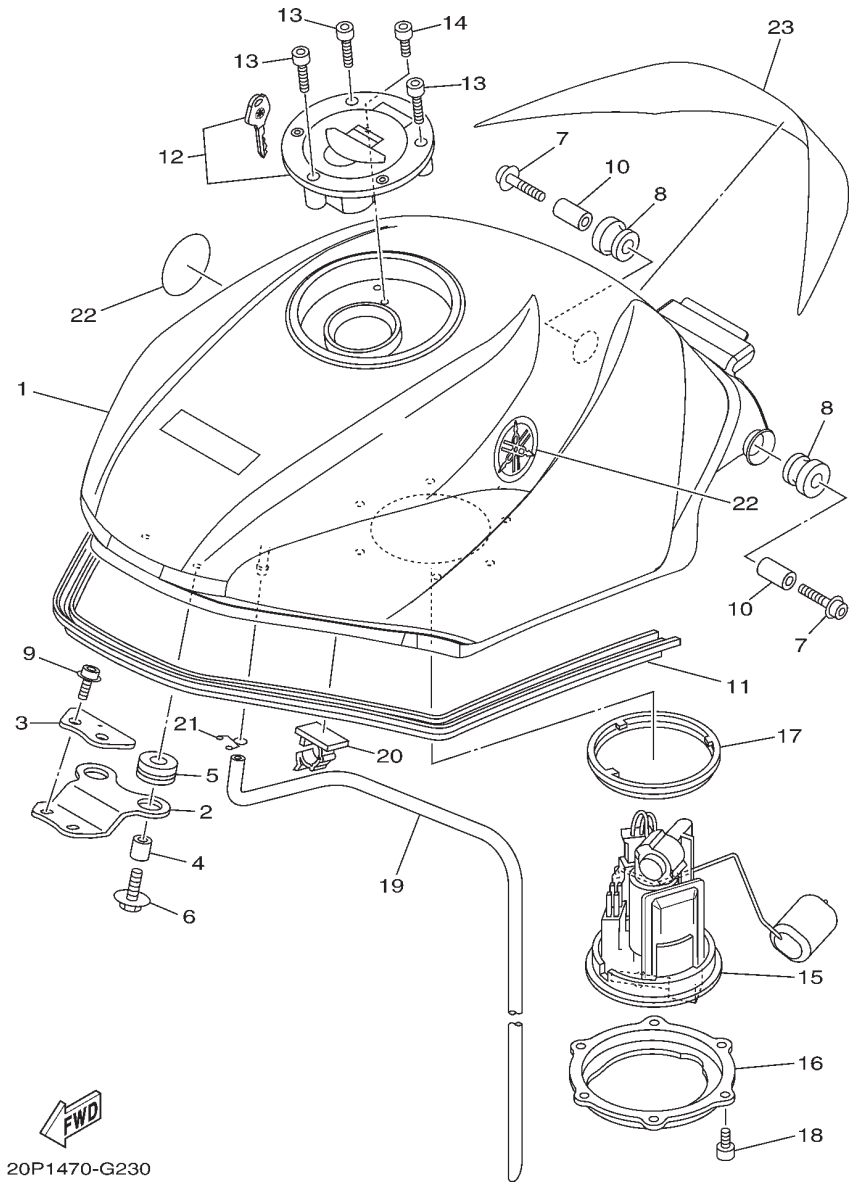

FIG. 23 (4S0) FUEL TANK

REF. NO.	PART NO.	PART NAME	20P1					REMARKS
1	20P-XF411-00-P0	FUEL TANK COMP.	1					UR FOR DPBMY
	20P-XF411-00-P1	FUEL TANK COMP.	1					UR FOR SMX
2	20P-F4191-00	BRACKET, FUEL TANK 1	1					
3	20P-F411F-00	PLATE, FITTING	1					
4	90387-06892	COLLAR	2					
5	90480-15483	GROMMET	2					
6	90119-06234	BOLT, WITH WASHER	2					
7	90110-06287	BOLT, HEXAGON SOCKET HEAD	2					
8	90480-18549	GROMMET	2					
9	90110-06215	BOLT, HEXAGON SOCKET HEAD	2					
10	90387-06890	COLLAR	2					
11	20P-F4188-00	MOLD, FUEL TANK	1					
12	20P-WF461-00	CAP ASSY WITH LOCK	1					
13	90110-05112	BOLT, HEXAGON SOCKET HEAD	3					
14	91317-05010	BOLT	1					
15	3C1-E3907-00	FUEL PUMP COMP.	1					
16	20P-F4491-00	BRACKET, FUEL PUMP	1					
17	20P-F4486-00	O-RING	1					
18	91317-05010	BOLT	6					
19	20P-F4312-00	PIPE 2	1					
20	90464-25160	CLAMP	1					
21	90467-09006	CLIP	1					
22	5YY-F413B-00	EMBLEM	2					
23	20P-F4141-00	PROTECTOR, FUEL TANK	1					

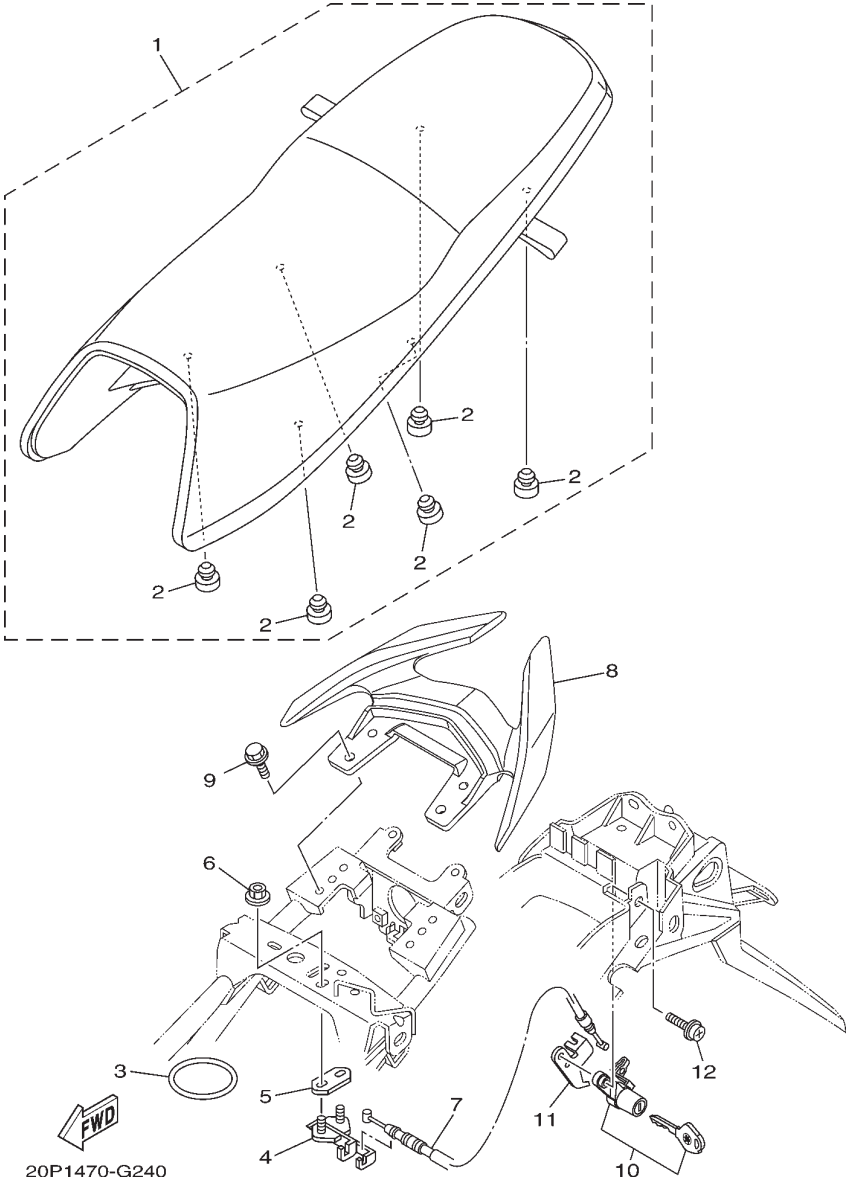

FIG. 24 (4U0) SEAT

REF. NO.	PART NO.	PART NAME	20P1					REMARKS
1	20P-F4730-00	DOUBLE SEAT ASSY	1					
2	20P-F4741-00	.PAD, SEAT	6					
3	20P-H2131-00	BAND, BATTERY	1					
4	20P-F4780-00	SEAT LOCK ASSY	1					
5	20P-F4792-00	PLATE	1					
6	95707-06500	NUT, FLANGE	2					
7	20P-F478E-00	CABLE, SEAT LOCK	1					
8	20P-F4773-00-P0	HANDLE, SEAT	1					UR FOR DPBMY
	20P-F4773-00-P1	HANDLE, SEAT	1					UR FOR SMX
9	95827-08020	BOLT, FLANGE	4					
10	20P-WF478-00	SEAT LOCK WITH KEY	1					
11	20P-F117K-00	STAY, LOCK	1					
12	90159-06033	SCREW, WITH WASHER	1					

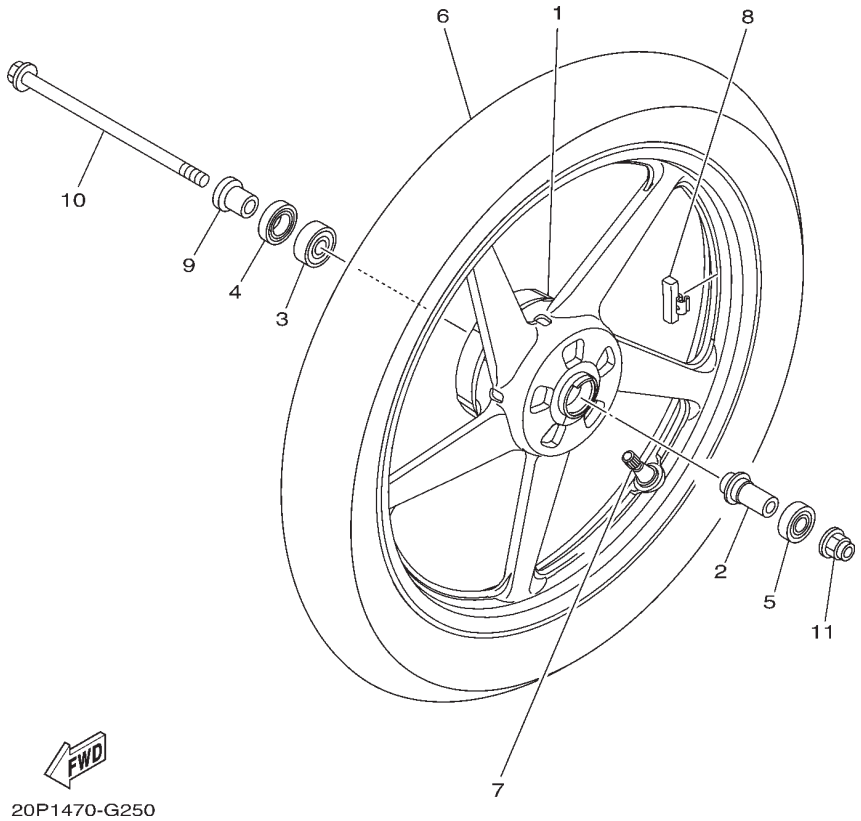

FIG. 25 (4W0) FRONT WHEEL

REF. NO.	PART NO.	PART NAME	20P1					REMARKS
1	20P-F5168-00	CAST WHEEL, FRONT	1					
2	20P-F510C-00	COLLAR ASSY.	1					
3	93306-301XN	BEARING	1					
4	93106-20823	OIL SEAL	1					
5	93306-201X8	BEARING	1					
6	94108-17831	TIRE	1					
7	93900-00824	VALVE, RIM TR413	1					
8	5MT-25398-00	BALANCER, WHEEL (10G)	1					UN
	5MT-25398-10	BALANCER, WHEEL (20G)	1					UN
	5MT-25398-20	BALANCER, WHEEL (30G)	1					UN
9	20P-F5186-00	COLLAR, WHEEL	1					
10	20P-F5181-00	AXLE, WHEEL	1					
11	95607-12200	NUT, SELF-LOCKING	1					

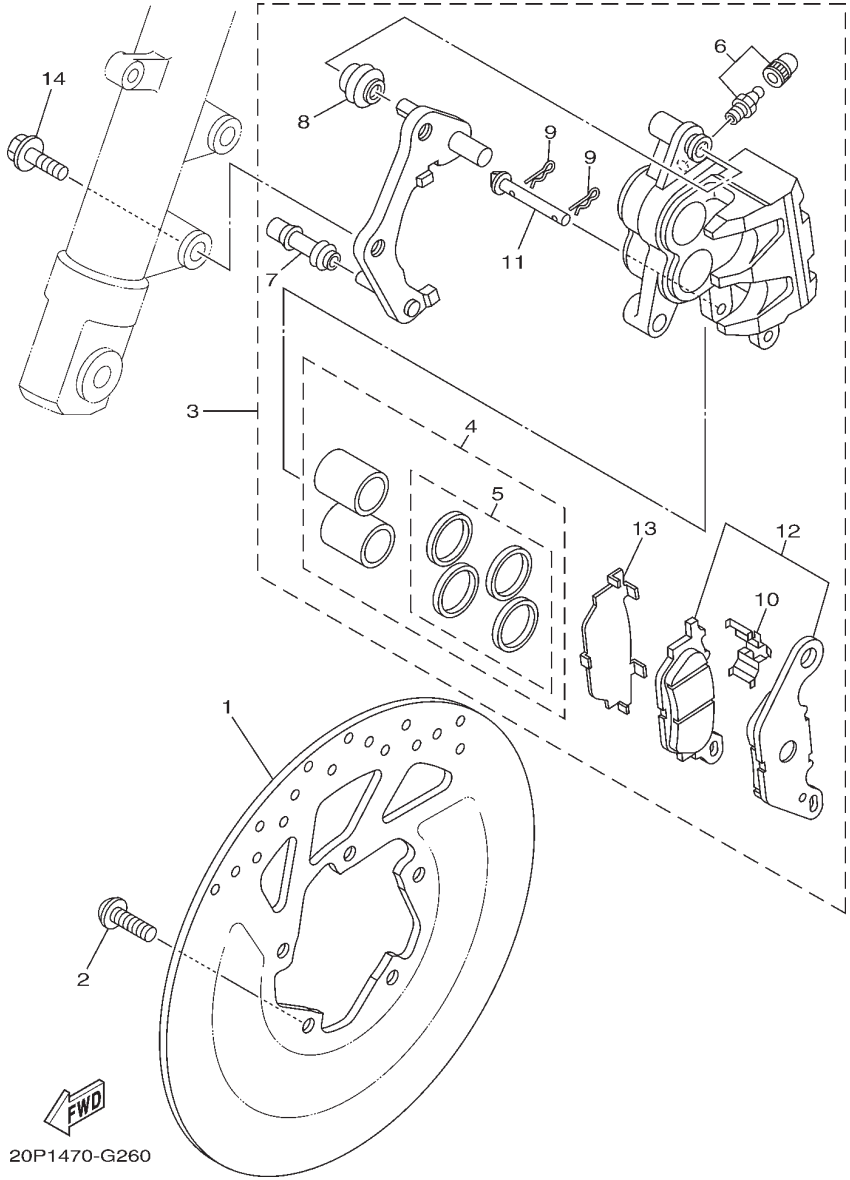

FIG. 26 (4X0) FRONT BRAKE CALIPER

REF. NO.	PART NO.	PART NAME	20P1					REMARKS
1	20P-F582U-00	DISK, BRAKE (RIGHT)	1					
2	90111-08057	BOLT,HEX. SOCKET BUTTON	5					
3	3C1-F580U-00	CALIPER ASSY (RIGHT)	1					
4	3C1-W0057-00	.PISTON ASSY, CALIPER	1					
5	3C1-W0047-00	..CALIPER SEAL KIT	1					
6	5TL-W0048-00	.BLEED SCREW KIT	1					
7	5YP-F5937-00	.BOOT 2	1					
8	5YP-F5917-00	.BOOT, CALIPER	1					
9	5YP-F5925-01	.CLIP	2					
10	5YP-F5919-00	.SUPPORT, PAD	1					
11	5YP-F5924-00	.PIN, PAD	1					
12	4C9-W0045-00	.BRAKE PAD KIT	1					
13	5YP-F5939-00	.CLIP, PAD	1					
14	90105-10082	BOLT, FLANGE	2					

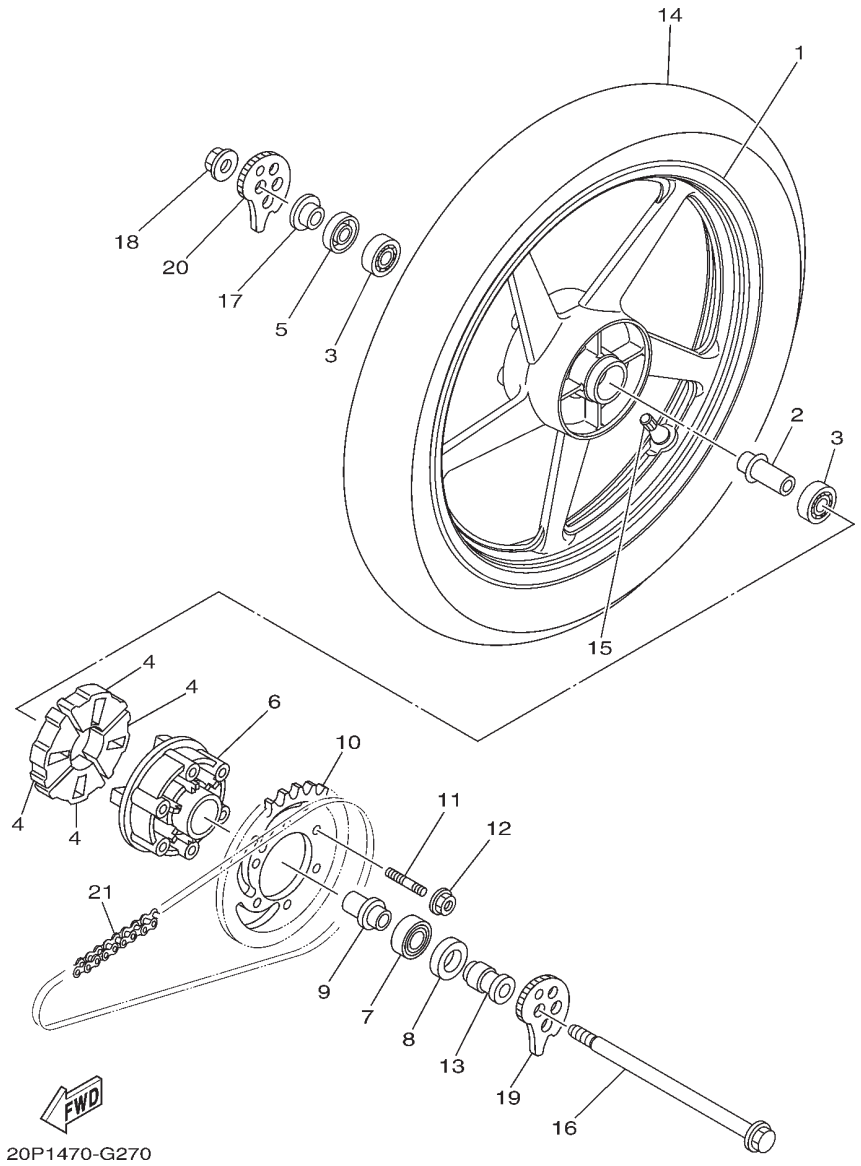

FIG. 27 (4Y0) REAR WHEEL

REF. NO.	PART NO.	PART NAME	20P1					REMARKS
1	20P-F5338-00	CAST WHEEL, REAR	1					
2	20P-F530S-00	COLLAR ASSY	1					
3	93306-252YH	BEARING	2					
4	20P-F5364-00	DAMPER	4					
5	93106-22806	OIL SEAL	1					
6	20P-F5366-00-33	CLUTCH, HUB	1					
7	93306-054Y5	BEARING	1					
8	93106-26801	OIL SEAL	1					
9	20P-F5377-00	COLLAR, WHEEL	1					
10	20P-F5442-00	SPROCKET, DRIVEN (42T)	1					
11	90116-08552	BOLT, STUD	6					
12	95607-08200	NUT, SELF-LOCKING	6					
13	20P-F5386-00	COLLAR, SPROCKET AXLE	1					
14	94110-17803	TIRE	1					
15	93900-00824	VALVE, RIM TR413	1					
16	20P-F5381-00	AXLE, WHEEL	1					
17	20P-F5383-00	COLLAR, WHEEL	1					
18	95607-14200	NUT, SELF-LOCKING	1					
19	20P-F5388-00	PULLER, CHAIN 1	1					
20	20P-F5389-00	PULLER, CHAIN 2	1					
21	94568-B8120	CHAIN	1					

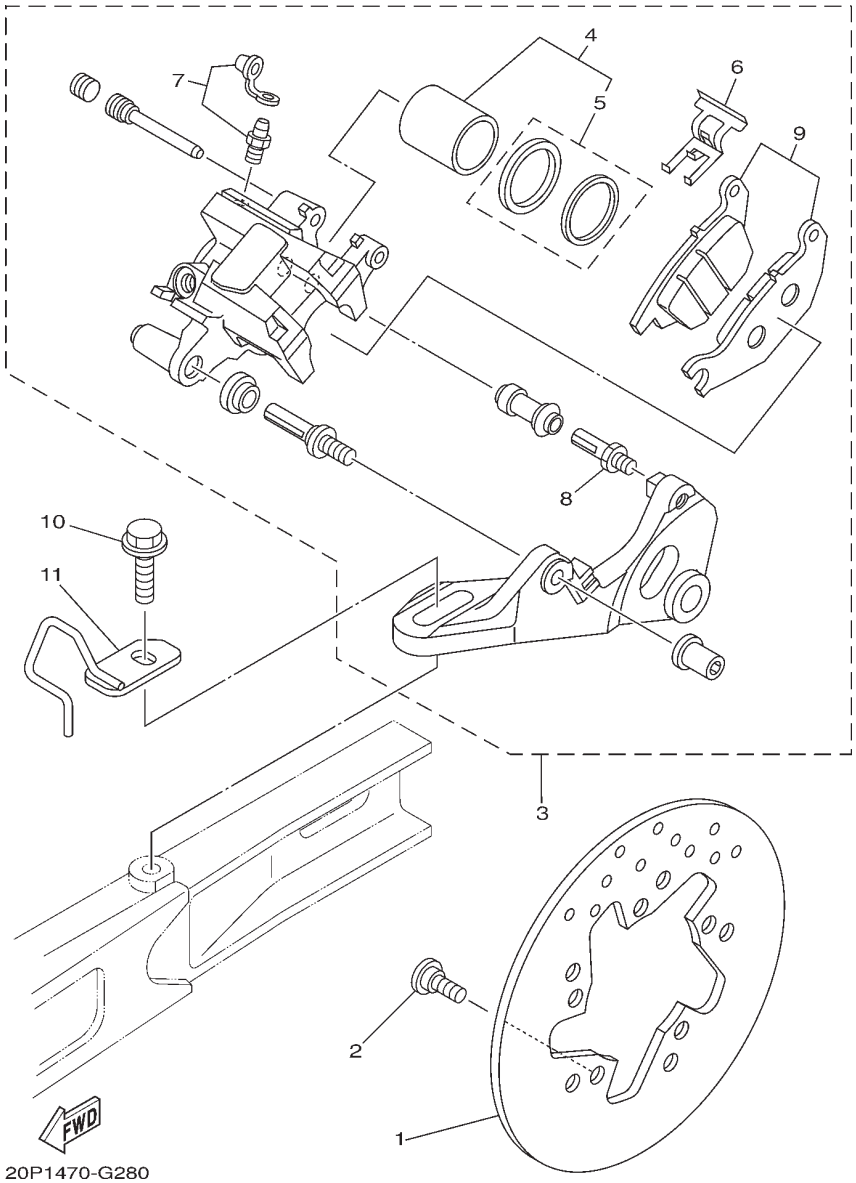

FIG. 28 (4Z0) REAR BRAKE CALIPER

REF. NO.	PART NO.	PART NAME	20P1					REMARKS
1	20P-F582W-00	DISK, REAR BRAKE 2	1					
2	90109-08015	BOLT	5					
3	20P-F580W-00	CALIPER ASSY, REAR 2	1					
4	4S3-W0057-00	.PISTON ASSY, CALIPER	1					
5	3GD-W0047-00	..CALIPER SEAL KIT	1					
6	4S3-F5919-00	.SUPPORT, PAD	1					
7	4S3-W0048-00	.BLEED SCREW KIT	1					
8	3SP-F5914-51	.PIN, SLIDE	1					
9	20P-W0046-00	.BRAKE PAD KIT 2	1					
10	95817-10030	BOLT, FLANGE	1					
11	20P-F587A-00	HOLDER, BRAKE HOSE	1					

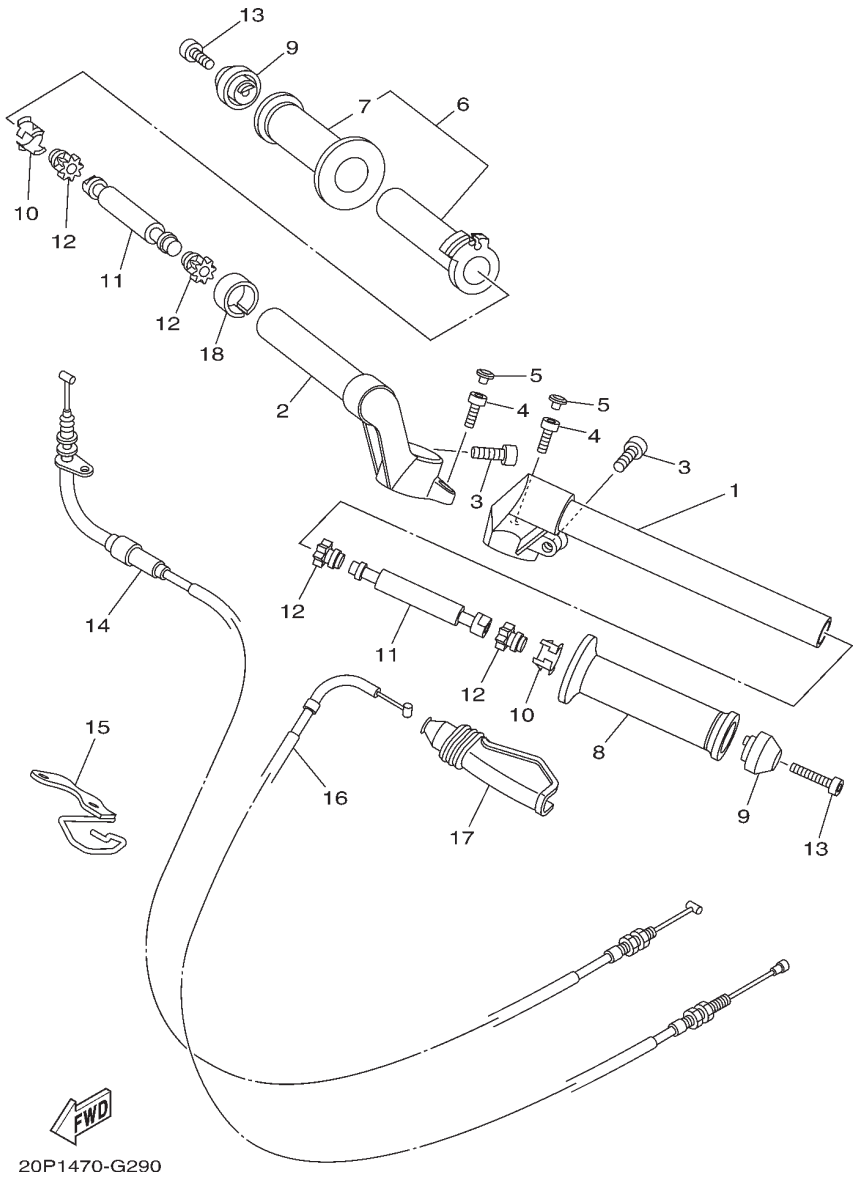

FIG. 29 (5B0) STEERING HANDLE & CABLE

REF. NO.	PART NO.	PART NAME	20P1					REMARKS
1	20P-F6121-00	HANDLEBAR (LEFT)	1					
2	20P-F6122-00	HANDLEBAR (RIGHT)	1					
3	91317-08025	BOLT	2					
4	91317-06020	BOLT	2					
5	20P-F3469-00	CAP, BOLT	2					
6	20P-F6240-00	GRIP ASSY	1					
7	20P-F6242-00	.GRIP (RIGHT)	1					
8	20P-F6241-00	GRIP	1					
9	20P-F6246-00	END, GRIP	2					
10	20P-F6257-00	STOPPER	2					
11	20P-F622H-00	WEIGHT	2					
12	20P-F622F-00	DAMPER, LOCATING 1	4					
13	91317-06030	BOLT	2					
14	20P-F6311-00	CABLE, THROTTLE 1	1					
15	20P-F6315-00	GUIDE, WIRE	1					
16	20P-F6335-00	CABLE, CLUTCH	1					
17	20P-F6372-00	COVER, HANDLE LEVER 1	1					
18	90387-22591	COLLAR	1					

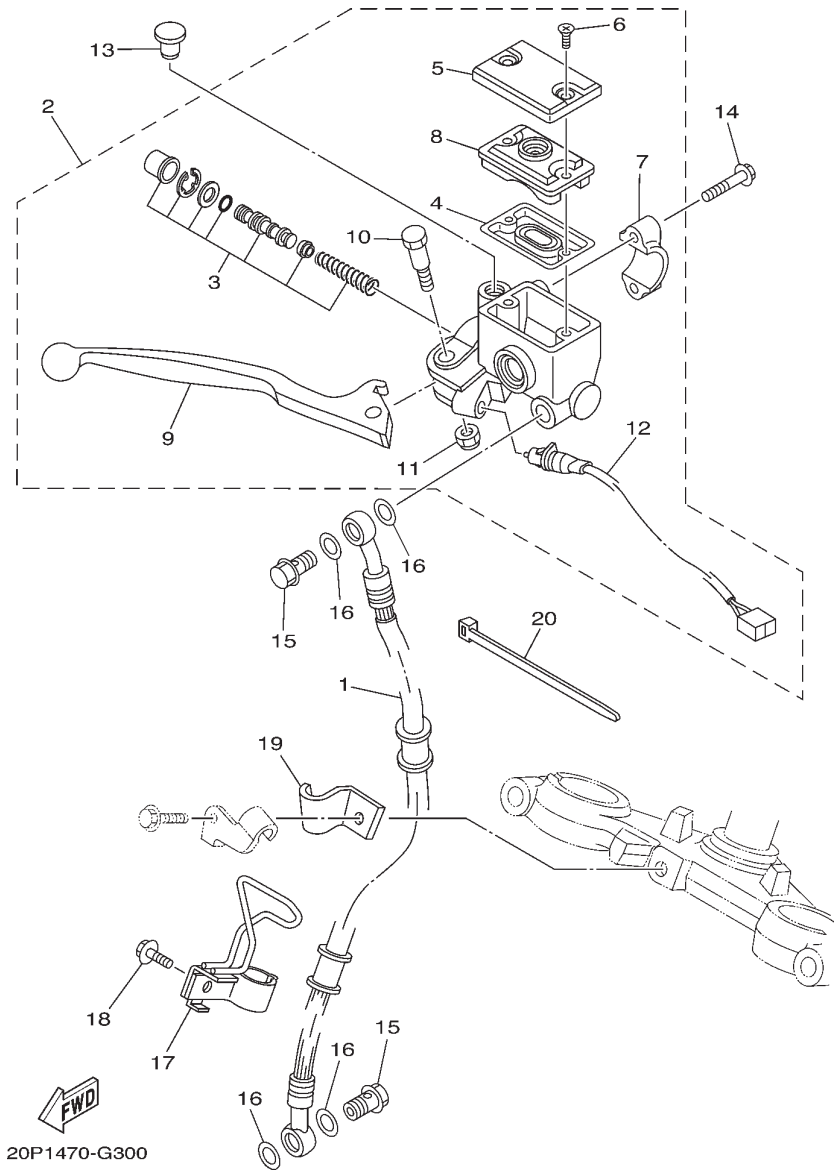

FIG. 30 (5C0) FRONT MASTER CYLINDER

REF. NO.	PART NO.	PART NAME	20P1					REMARKS
1	20P-F5872-00	HOSE, BRAKE 1	1					
2	3C1-F583T-00	MASTER CYLINDER ASSY	1					
3	5TL-W0041-01	.CYLINDER KIT, MASTER	1					
4	3RW-F5854-00	.GASKET, DIAPHRAGM	1					
5	3C1-F5852-00	.CAP, RESERVOIR	1					
6	36Y-2589H-00	.SCREW	2					
7	3RW-F5867-00	.HOLDER	1					
8	3C1-F5855-00	.BUSH,DIAPHRAGM	1					
9	3C1-H3922-00	.LEVER 2	1					
10	90109-06577	.BOLT	1					
11	95607-06100	.NUT, U	1					
12	5BP-H3980-10	.FRONT STOP SWITCH ASSY	1					
13	90338-09802	PLUG	1					
14	95027-06025	BOLT, FLANGE	2					
15	90401-10159	BOLT, UNION	2					
16	90201-10118	WASHER, PLATE	4					
17	20P-F5886-00	HOLDER, BRAKE HOSE	1					
18	95027-06016	BOLT, FLANGE	1					
19	20P-F5876-00	HOLDER, BRAKE HOSE 2	1					
20	90464-50800	CLAMP	1					

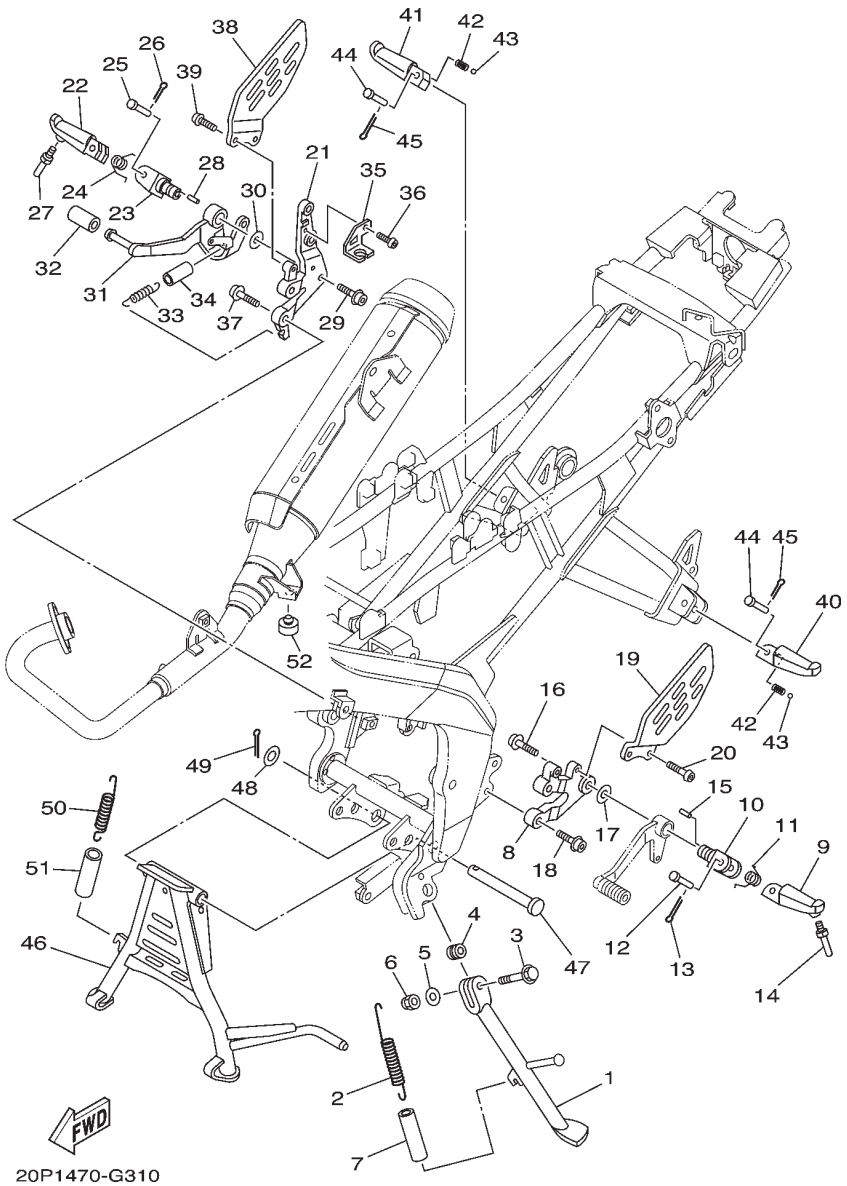

FIG. 31 (5F0) STAND & FOOTREST

REF. NO.	PART NO.	PART NAME	20P1					REMARKS
1	20P-F7311-00	STAND, SIDE	1					
2	90506-28800	SPRING, TENSION	1					
3	90105-106A7	BOLT, FLANGE	1					
4	90387-10003	COLLAR	1					
5	92907-10600	WASHER, PLATE	1					
6	95617-10100	NUT, U	1					
7	90445-21848	HOSE (L70)	1					
8	20P-F7442-00	BRACKET 2	1					
9	20P-F7451-00	FOOTREST	1					
10	20P-F7411-00	FOOTREST 1	1					
11	90508-183B9	SPRING, TORSION	1					
12	90240-08800	PIN, CLEVIS	1					
13	91401-20012	PIN, COTTER	1					
14	2C0-27435-00	BOLT	1					
15	90249-02002	PIN	1					
16	90110-10012	BOLT, HEXAGON SOCKET HEAD	1					
17	90201-10066	WASHER, PLATE	1					
18	90110-08199	BOLT, HEXAGON SOCKET HEAD	2					
19	20P-F7445-00	PLATE 1	1					
20	92012-06016	BOLT, BUTTON HEAD	2					
21	20P-F7443-00	BRACKET 3	1					
22	20P-F7461-00	FOOTREST	1					
23	20P-F7411-00	FOOTREST 1	1					
24	90508-184B0	SPRING, TORSION	1					
25	90240-08800	PIN, CLEVIS	1					
26	91401-20012	PIN, COTTER	1					
27	2C0-27435-00	BOLT	1					
28	90249-02002	PIN	1					
29	90110-10012	BOLT, HEXAGON SOCKET HEAD	1					

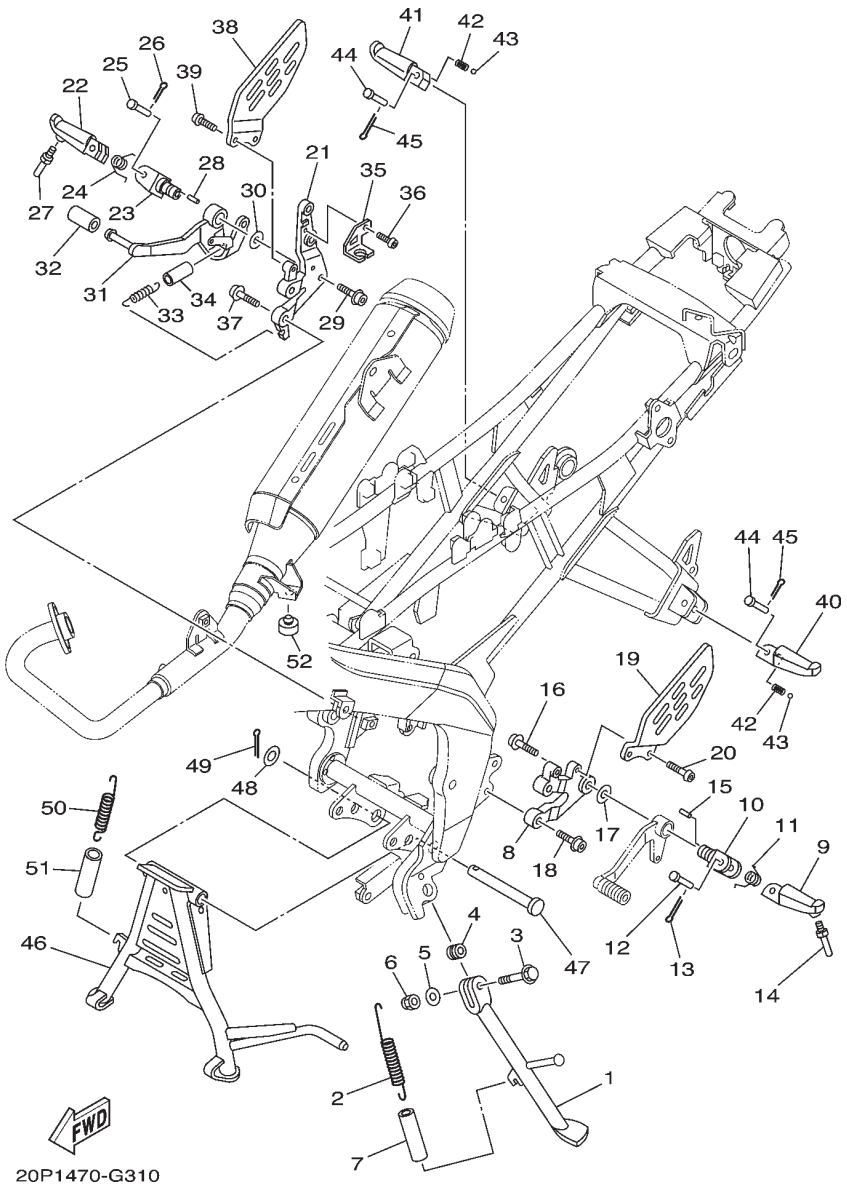

FIG. 31 (5F0) STAND & FOOTREST

REF. NO.	PART NO.	PART NAME	20P1					REMARKS
30	90201-10066	WASHER, PLATE	1					
31	20P-F7211-00	PEDAL, BRAKE	1					
32	20P-E8113-00	COVER, SHIFT PEDAL	1					
33	90506-20193	SPRING, TENSION	1					
34	90445-16807	HOSE	1					
35	20P-F144G-00	STAY, STOP SWITCH	1					
36	92012-06010	BOLT, BUTTON HEAD	1					
37	90110-08199	BOLT, HEXAGON SOCKET HEAD	2					
38	20P-F7446-00	PLATE 2	1					
39	92012-06016	BOLT, BUTTON HEAD	2					
40	20P-F7431-00	FOOTREST, REAR 1	1					
41	20P-F7441-00	FOOTREST, REAR 2	1					
42	90501-12743	SPRING, COMPRESSION	2					
43	93501-04805	BALL	2					
44	90240-08800	PIN, CLEVIS	2					
45	91401-20012	PIN, COTTER	2					
46	3C1-F7111-00	STAND, MAIN	1					
47	3C1-F7112-00	SHAFT, MAIN STAND	1					
48	90201-163H8	WASHER, PLATE	1					
49	91401-30030	PIN, COTTER	1					
50	90506-35003	SPRING, TENSION	1					
51	90445-21848	HOSE (L70)	1					
52	4YY-F7114-00	STOPPER, MAIN STAND	1					

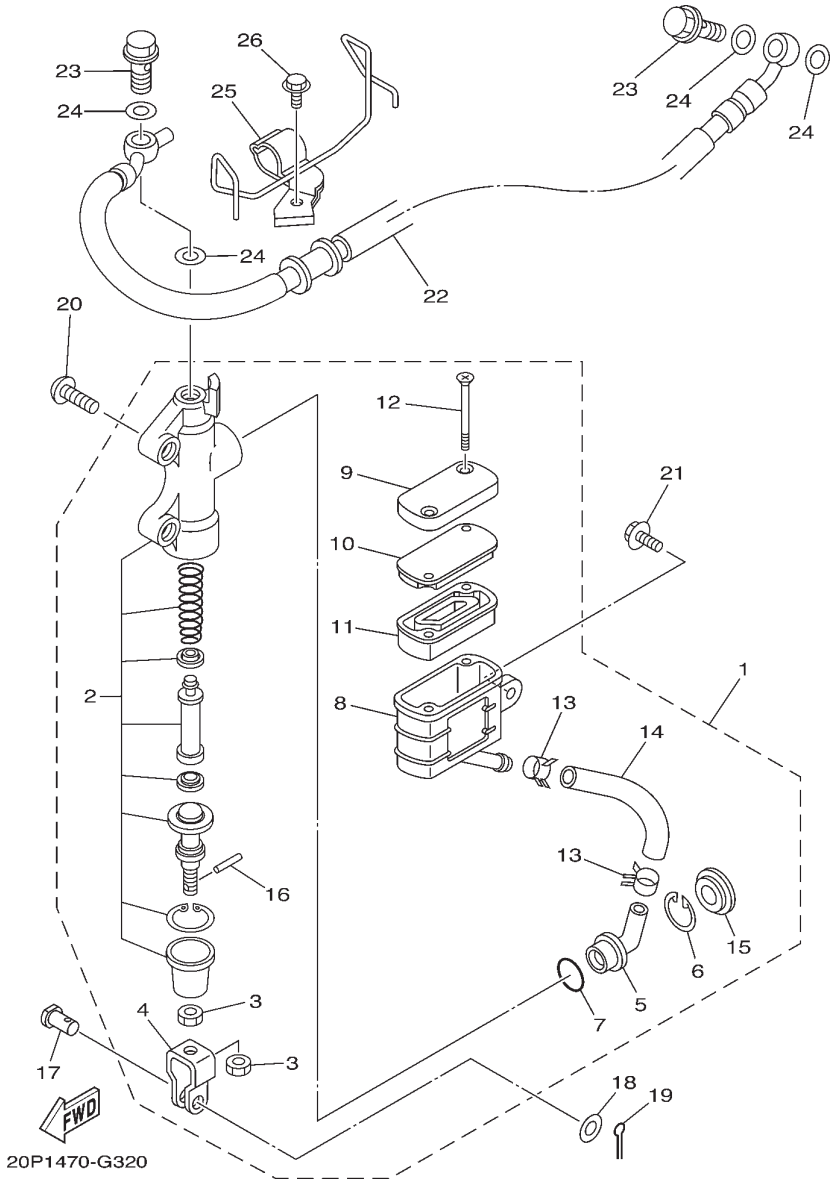

FIG. 32 (5G0) REAR MASTER CYLINDER

REF. NO.	PART NO.	PART NAME	20P1					REMARKS
1	20P-F583V-01	RR. MASTER CYLINDER ASSY.	1					
2	20P-W0042-00	.CYLINDER KIT, MASTER	1					
3	95301-08700	.NUT	2					
4	2YK-F7222-00	.JOINT	1					
5	4ML-F582A-50	.JOINT	1					
6	2VN-F5866-00	.CIRCLIP	1					
7	93210-15620	.O-RING	1					
8	20P-F5894-00	.TANK, RESERVOIR	1					
9	20P-F5852-00	.CAP, RESERVOIR	1					
10	20P-F585B-00	.PLATE, DIAPHRAGM	1					
11	20P-F5854-00	.GASKET, DIAPHRAGM	1					
12	98707-04045	.SCREW, FLAT HEAD	2					
13	90467-12085	.CLIP	2					
14	20P-F5895-00	.HOSE, RESERVOIR	1					
15	3FV-F589A-00	.COVER, DUST	1					
16	4TT-F7238-00	.PIN	1					
17	90240-08124	PIN, CLEVIS	1					
18	90201-08083	WASHER, PLATE	1					
19	91401-20012	PIN, COTTER	1					
20	92012-08020	BOLT, BUTTON HEAD	2					
21	90119-06044	BOLT, WITH WASHER	1					
22	20P-F5873-00	HOSE, BRAKE 2	1					
23	90401-10159	BOLT, UNION	2					
24	90201-10118	WASHER, PLATE	4					
25	20P-F5887-00	HOLDER, BRAKE HOSE	1					
26	95027-06010	BOLT, FLANGE	1					

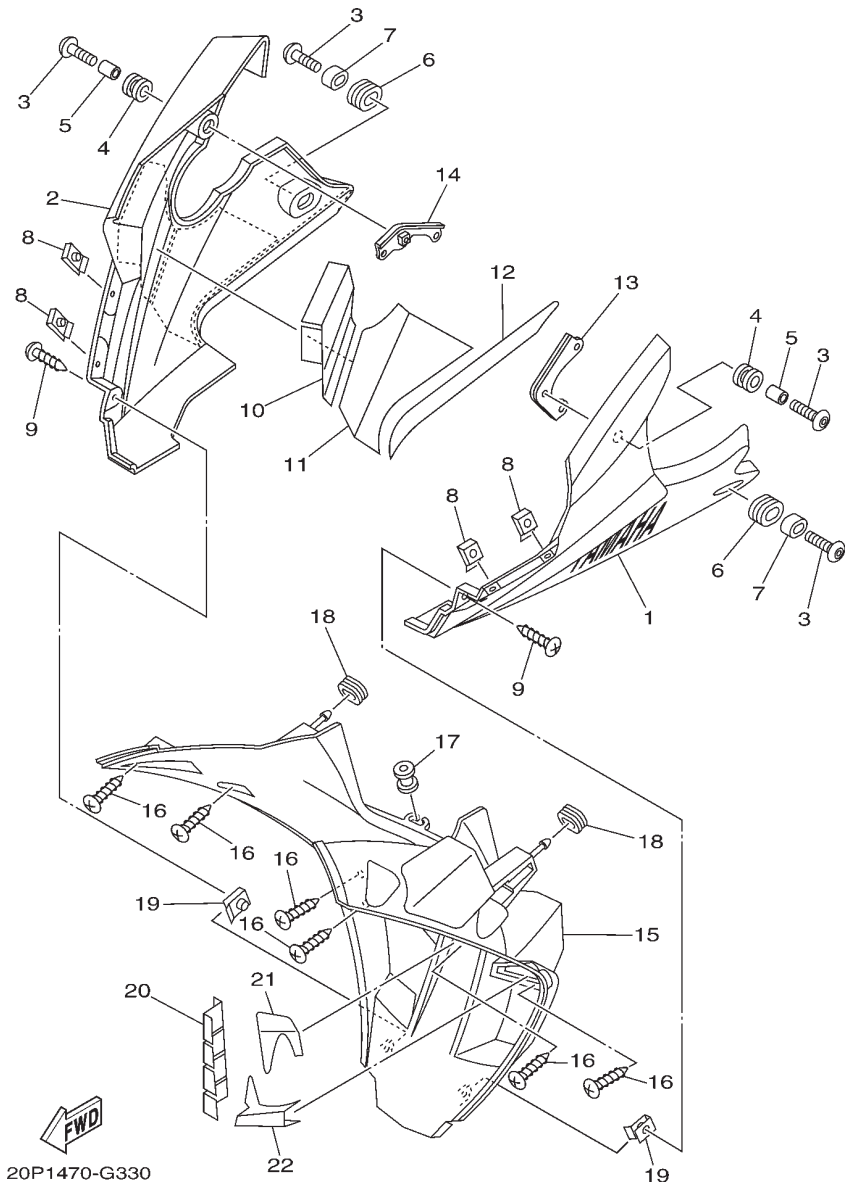

FIG. 33 (5M0) LEG SHIELD

REF. NO.	PART NO.	PART NAME	20P1					REMARKS
1	20P-XF838-00-33	UNDER COVER ASSY 1	1					UR YB FOR DPBMY
	20P-XF838-00-P0	UNDER COVER ASSY 1	1					UR YB FOR SMX
2	20P-XF839-00-33	UNDER COVER ASSY 2	1					UR YB FOR DPBMY
	20P-XF839-00-P0	UNDER COVER ASSY 2	1					UR YB FOR SMX
3	90111-06117	BOLT,HEX. SOCKET BUTTON	4					
4	90480-14003	GROMMET	2					
5	90387-068C2	COLLAR	2					
6	90480-01811	GROMMET	2					
7	20P-F1749-00	COLLAR	2					
8	90183-05076	NUT, SPRING	4					
9	97707-50012	SCREW, TRUSS HEAD TAPPING	2					
10	20P-F848M-00	SEAT 4	1					
11	20P-F848N-00	SEAT 5	1					
12	20P-F848P-00	SEAT 6	1					
13	20P-F831U-00	STAY, SIDE 1	1					
14	20P-F832U-00	STAY, SIDE 1	1					
15	20P-F836M-00	PANEL, INNER 3	1					
16	97707-50012	SCREW, TRUSS HEAD TAPPING	6					
17	20P-F1773-00	GROMMET	1					
18	90480-01559	GROMMET	2					
19	90183-05042	NUT, SPRING	2					
20	20P-F848H-00	SEAT	1					
21	20P-F848K-00	SEAT 2	1					
22	20P-F848L-00	SEAT 3	1					

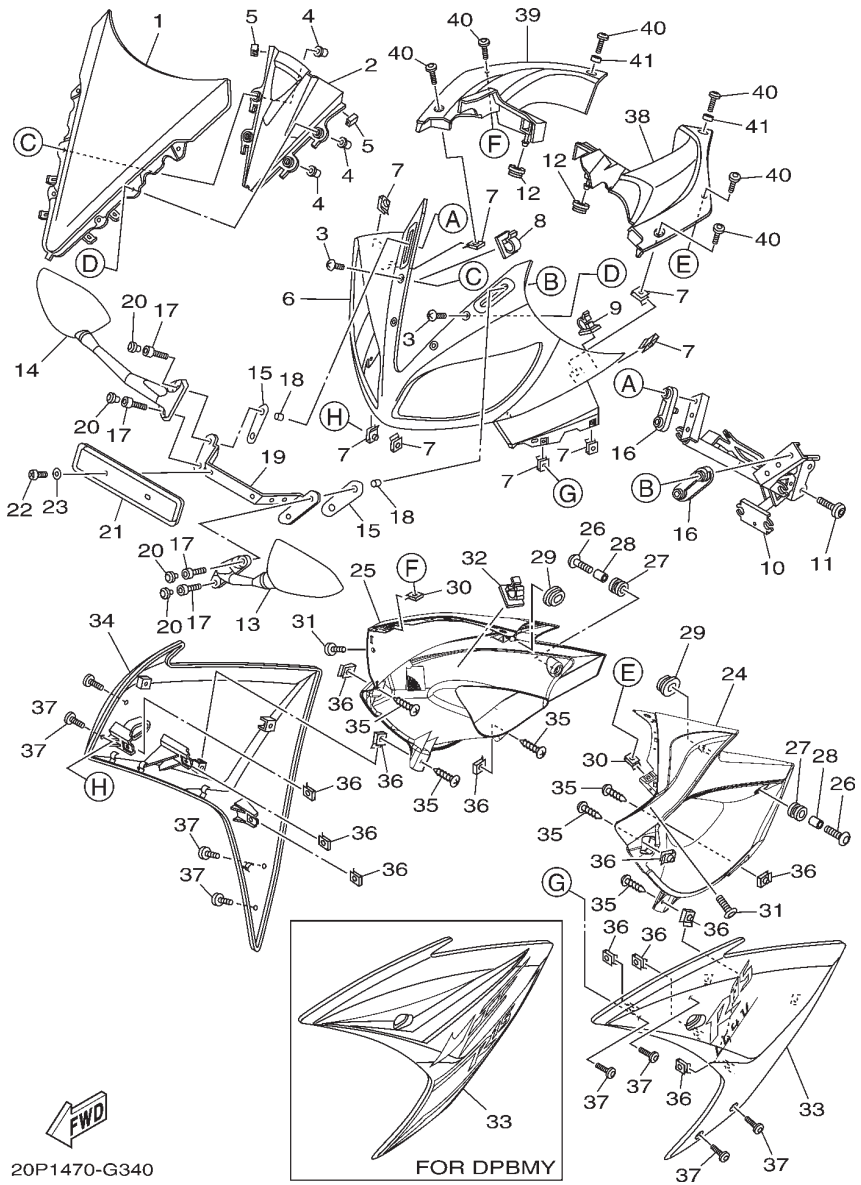

FIG. 34 (5M3) WINDSHIELD

REF. NO.	PART NO.	PART NAME	20P1					REMARKS
1	20P-F8381-00	WINDSHIELD	1					
2	20P-F836R-00	PANEL, INNER 5	1					
3	90150-05024	SCREW, ROUND HEAD	4					
4	90179-05523	NUT	4					
5	20P-F8371-00	DAMPER	2					
6	20P-F835G-00-P0	BODY, FRONT UPPER 1	1					UR FOR DPBMY
	20P-F835G-00-P1	BODY, FRONT UPPER 1	1					UR FOR SMX
7	90183-05076	NUT, SPRING	8					
8	90464-20003	CLAMP	1					
9	90464-25160	CLAMP	1					
10	20P-F8356-00	STAY 1	1					
11	90109-083A8	BOLT	2					
12	90480-01870	GROMMET	2					
13	20P-F6280-00	REAR VIEW MIRROR ASSY (LEFT)	1					
14	20P-F6290-00	REAR VIEW MIRROR ASSY (RIGHT)	1					
15	20P-F8483-00	PLATE, RUBBER 1	2					
16	20P-F8484-00	PLATE, RUBBER 2	2					
17	91317-06025	BOLT	4					
18	90387-068C2	COLLAR	4					
19	20P-F1685-00	BRACKET, LICENSE	1					
20	20P-F3469-00	CAP, BOLT	4					
21	5US-F3485-00	PLATE, NUMBER	1					
22	98507-05012	SCREW, PAN HEAD	2					
23	92907-05600	WASHER, PLATE	2					
24	20P-F117V-00-P0	COVER 7	1					UR FOR DPBMY
	20P-F117V-00-P1	COVER 7	1					UR FOR SMX
25	20P-F117W-00-P0	COVER 8	1					UR FOR DPBMY
	20P-F117W-00-P1	COVER 8	1					UR FOR SMX
26	90111-06117	BOLT,HEX. SOCKET BUTTON	2					

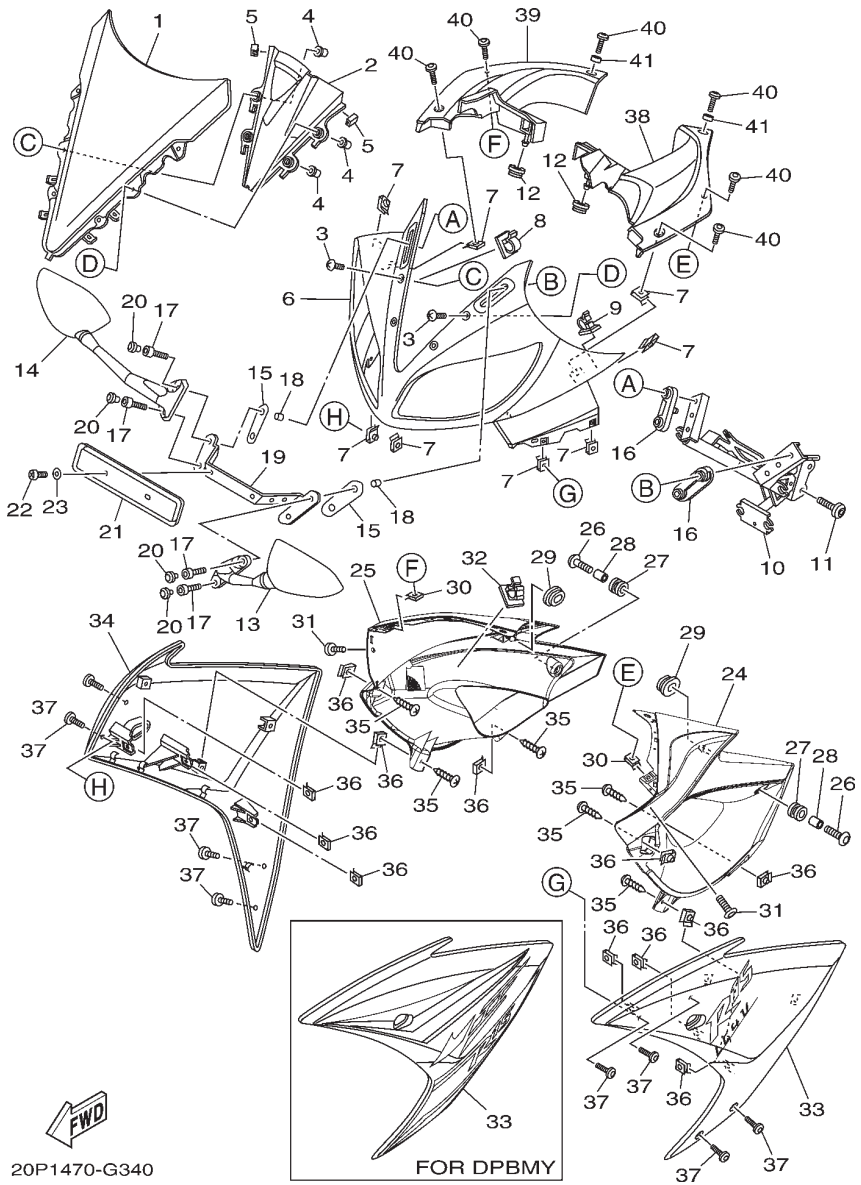

FIG. 34 (5M3) WINDSHIELD

REF. NO.	PART NO.	PART NAME	20P1					REMARKS
27	90480-14003	GROMMET	2					
28	90387-068C2	COLLAR	2					
29	90480-01870	GROMMET	2					
30	90183-05076	NUT, SPRING	2					
31	90111-05003	BOLT,HEX. SOCKET BUTTON	2					
32	90464-20003	CLAMP	1					
33	20P-XF836-00-P0	PANEL COMP 1	1					UR FOR DPBMY
	20P-XF836-00-P1	PANEL COMP 1	1					UR FOR SMX
34	20P-XF83A-00-P0	PANEL COMP 2	1					UR FOR DPBMY
	20P-XF83A-00-P1	PANEL COMP 2	1					UR FOR SMX
35	97707-50012	SCREW, TRUSS HEAD TAPPING	6					
36	90183-05042	NUT, SPRING	12					
37	90111-05003	BOLT,HEX. SOCKET BUTTON	8					
38	20P-F837L-00	PANEL, CONSOLE 1	1					
39	20P-F837M-00	PANEL, CONSOLE 2	1					
40	90111-05003	BOLT,HEX. SOCKET BUTTON	6					
41	90387-068C4	COLLAR	2					

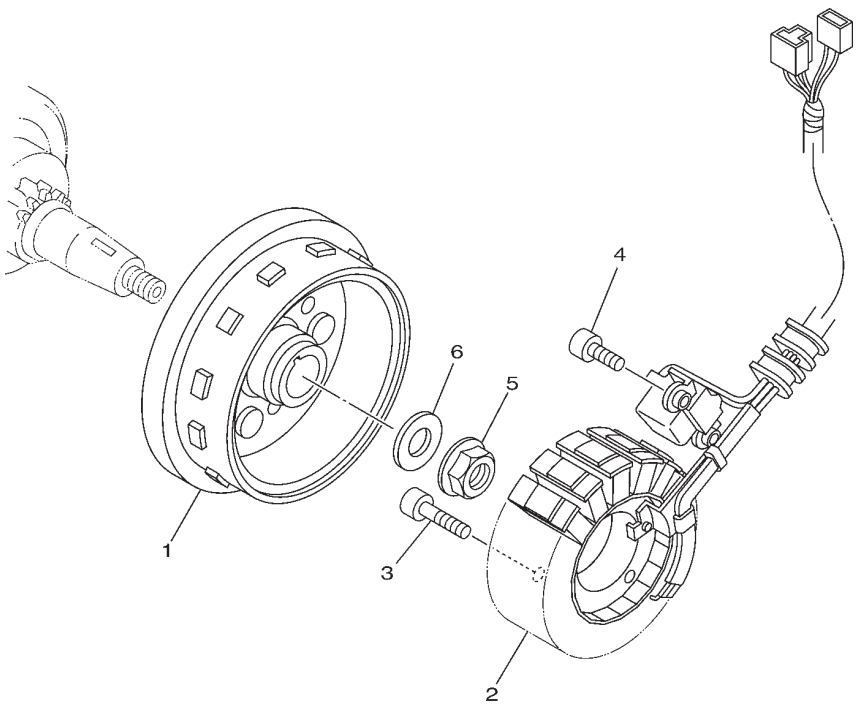

3C11460-F320

FIG. 35 (8A0) GENERATOR

REF. NO.	PART NO.	PART NAME	20P1					REMARKS
1	3C1-H1450-00	ROTOR ASSY	1					
2	3C1-H1410-00	STATOR ASSY	1					
3	91317-06025	BOLT	3					
4	91317-06016	BOLT	2					
5	95707-12500	NUT, FLANGE	1					
6	90201-122H1	WASHER, PLATE	1					

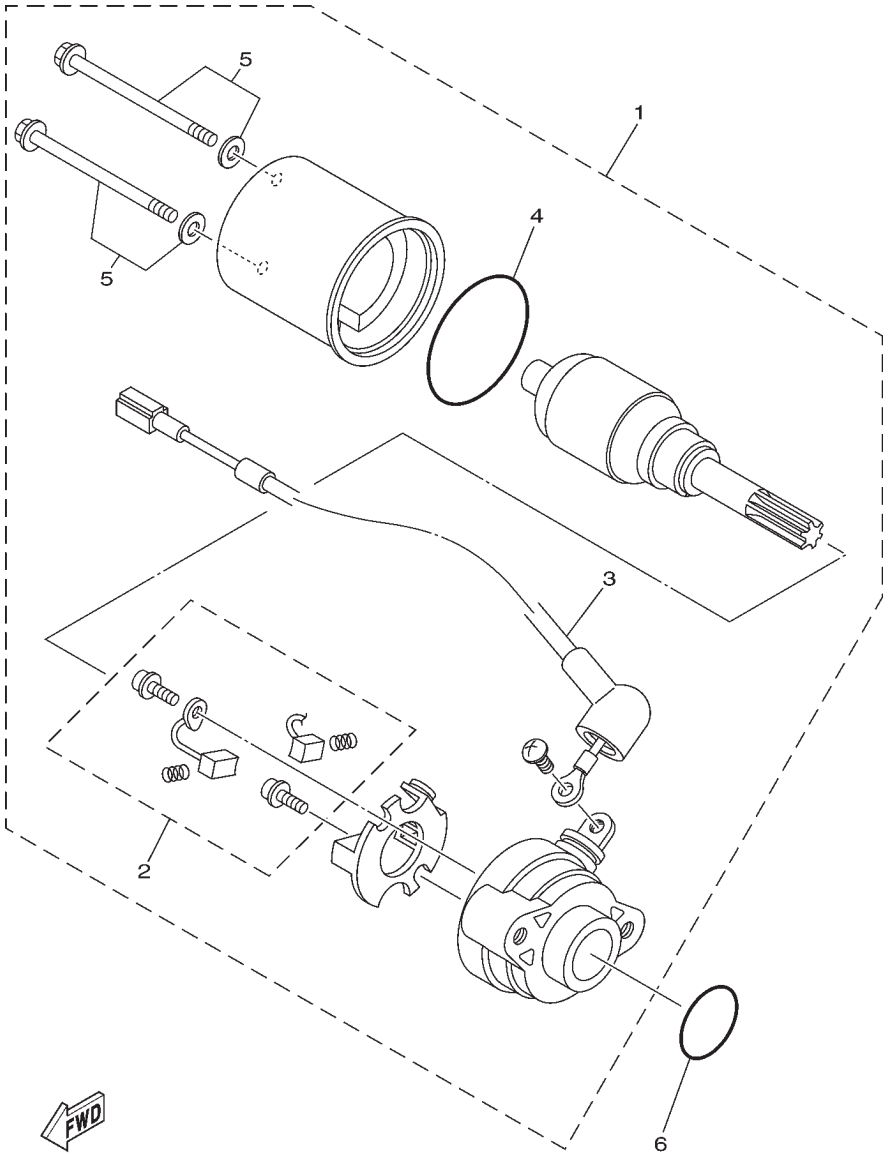

3C11460-F330

FIG. 36 (8C0) STARTING MOTOR

REF. NO.	PART NO.	PART NAME	20P1					REMARKS
1	5D7-H1800-00	STARTING MOTOR ASSY	1					
2	3AY-H1801-00	.BRUSH SET	1					
3	5D7-8183G-00	.CORD COMP.	1					
4	3AY-H182M-00	.O-RING	1					
5	3AY-H1828-00	.BOLT 2	1					
6	93210-26805	O-RING	1					

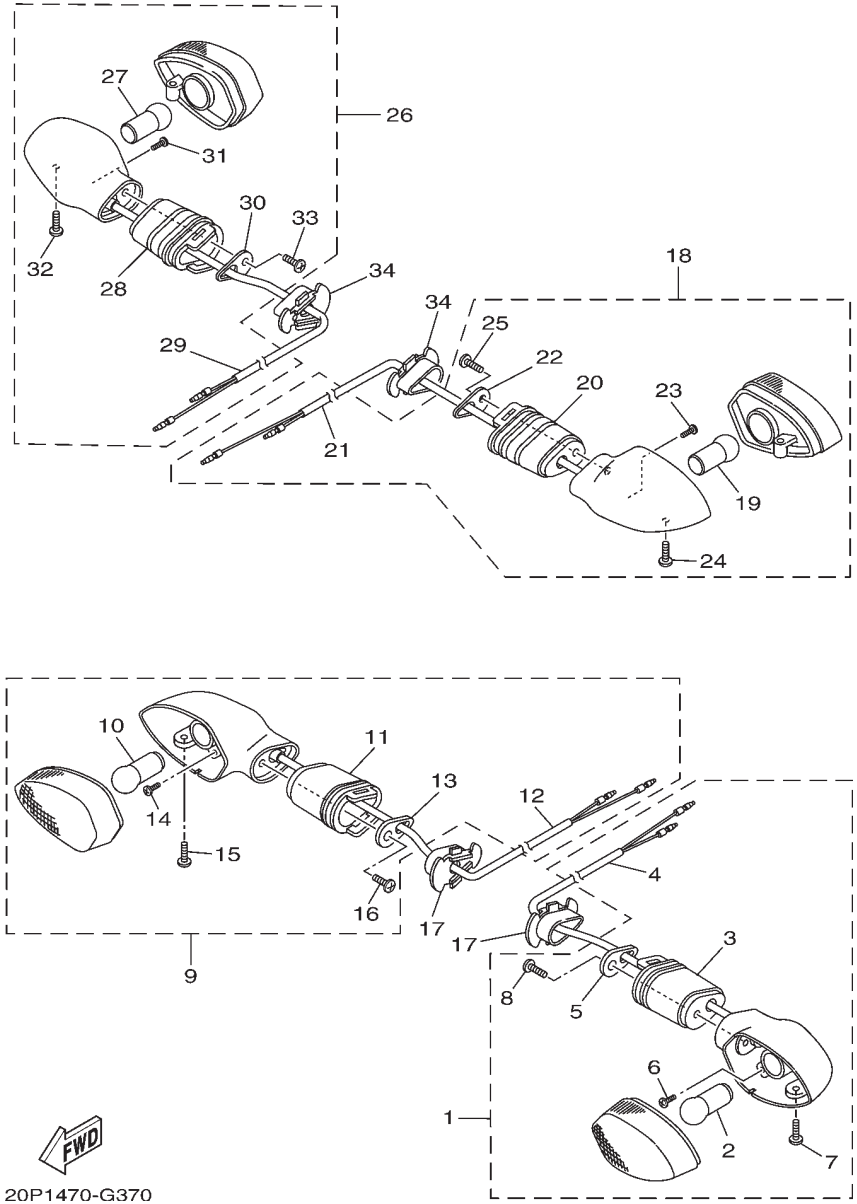

FIG. 37 (8F0) FLASHER LIGHT

REF. NO.	PART NO.	PART NAME	20P1					REMARKS
1	20P-H3310-00	FRONT FLASHER LIGHT ASSY 1	1					
2	20P-H3311-00	.BULB, FLASHER (12V-10W)	1					
3	20P-H3318-00	.STAY, FLASHER 1	1					
4	20P-H331E-00	.CORD ASSY	1					
5	20P-H3618-00	.PLATE	1					
6	20P-H213A-00	.SCREW, FITTING	1					
7	20P-H3333-00	.SCREW, LENS FITTING	1					
8	20P-H2133-00	.SCREW, FITTING	1					
9	20P-H3320-00	FRONT FLASHER LIGHT ASSY 2	1					
10	20P-H3311-00	.BULB, FLASHER (12V-10W)	1					
11	20P-H3318-00	.STAY, FLASHER 1	1					
12	20P-H332E-00	.CORD ASSY	1					
13	20P-H3618-00	.PLATE	1					
14	20P-H213A-00	.SCREW, FITTING	1					
15	20P-H3333-00	.SCREW, LENS FITTING	1					
16	20P-H2133-00	.SCREW, FITTING	1					
17	5YY-H3318-10	STAY, FLASHER 1	2					
18	20P-H3330-00	REAR FLASHER LIGHT ASSY 1	1					
19	20P-H3311-00	.BULB, FLASHER (12V-10W)	1					
20	20P-H3318-00	.STAY, FLASHER 1	1					
21	20P-H333E-00	.CORD ASS'Y	1					
22	20P-H3618-00	.PLATE	1					
23	20P-H213A-00	.SCREW, FITTING	1					
24	20P-H3333-00	.SCREW, LENS FITTING	1					
25	20P-H2133-00	.SCREW, FITTING	1					
26	20P-H3340-00	REAR FLASHER LIGHT ASSY 2	1					
27	20P-H3311-00	.BULB, FLASHER (12V-10W)	1					
28	20P-H3318-00	.STAY, FLASHER 1	1					
29	20P-H334E-00	.CORD ASS'Y	1					
30	20P-H3618-00	.PLATE	1					
31	20P-H213A-00	.SCREW, FITTING	1					
32	20P-H3333-00	.SCREW, LENS FITTING	1					
33	20P-H2133-00	.SCREW, FITTING	1					
34	5YY-H3318-10	STAY, FLASHER 1	2					

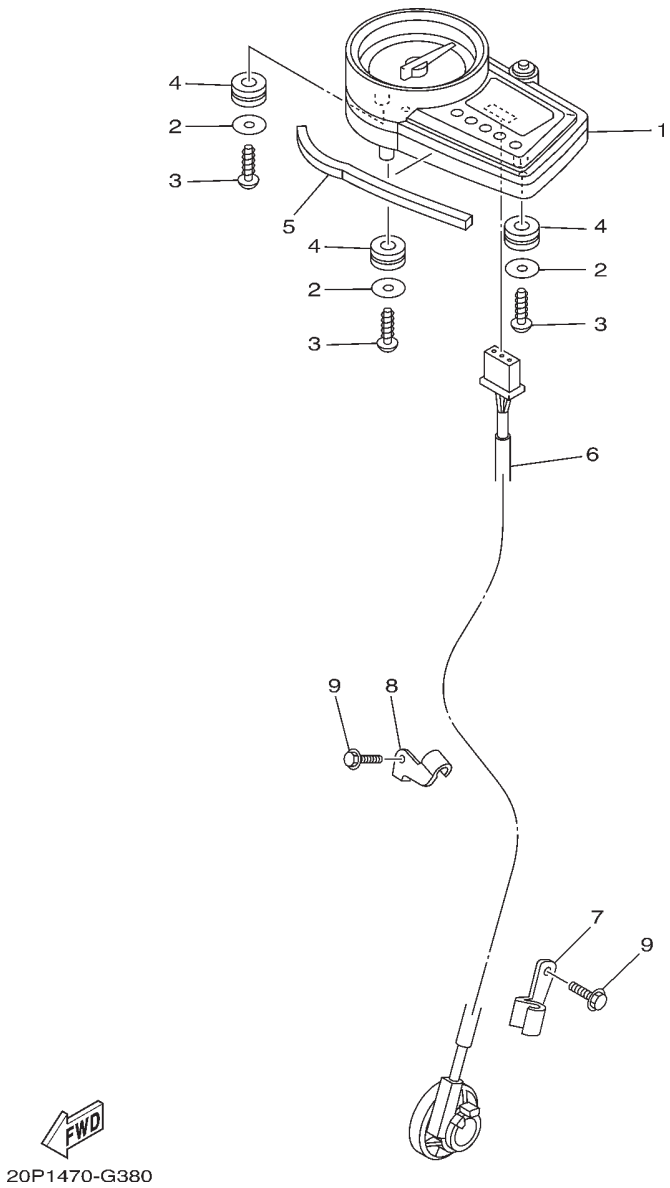

FIG. 38 (8G0) METER

REF. NO.	PART NO.	PART NAME	20P1					REMARKS
1	20P-H3500-00	METER ASSY	1					
2	90201-05036	WASHER, PLATE	3					
3	97707-50016	SCREW, TRUSS HEAD TAPPING	3					
4	90480-14816	GROMMET	3					
5	20P-H3592-00	DAMPER	1					
6	20P-H3755-00	SENSOR, SPEED	1					
7	20P-H3595-00	CLAMP	1					
8	20P-H3596-00	CLAMP	1					
9	95027-06014	BOLT, FLANGE	2					

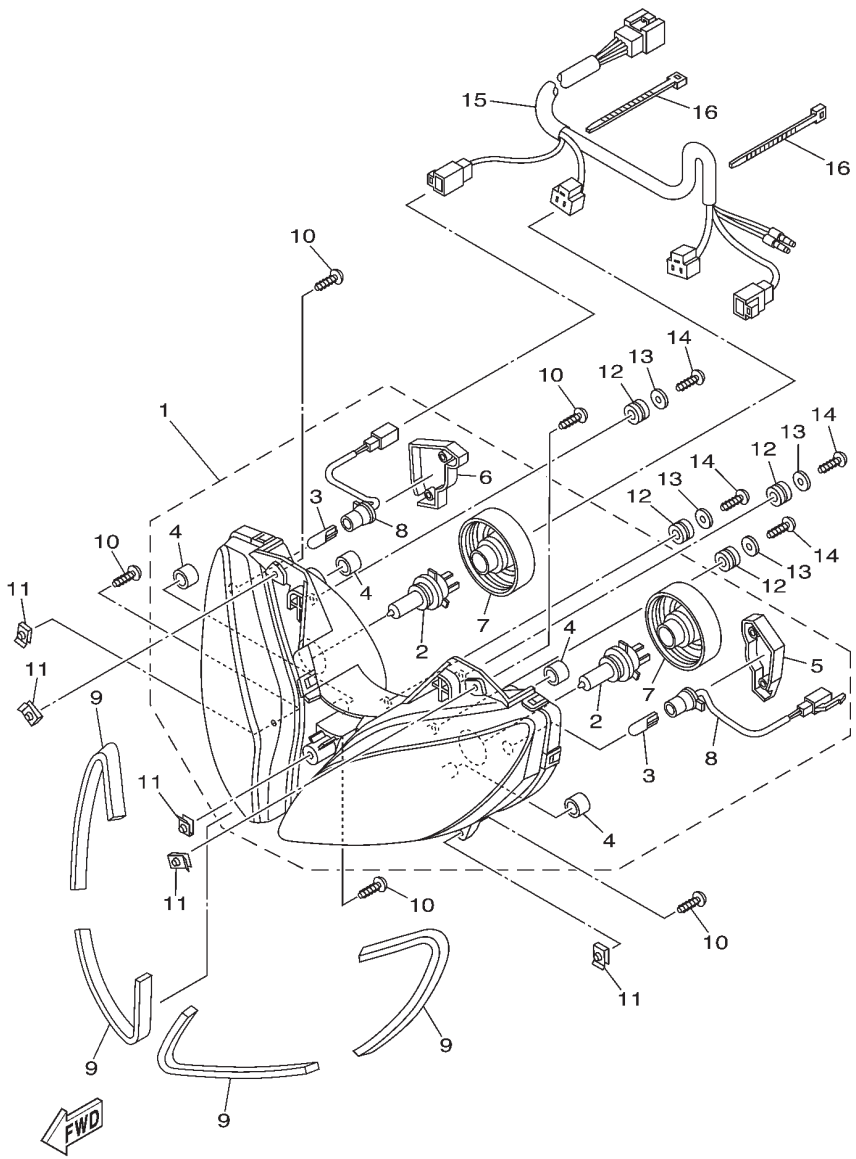

FIG. 39 (8H0) HEADLIGHT

REF. NO.	PART NO.	PART NAME	20P1					REMARKS
1	20P-H4300-00	HEADLIGHT ASSY	1					
2	20P-H4314-00	.BULB (12V-35/35W)	2					
3	20P-H4347-00	.BULB (12V-5W)	2					
4	20P-H4378-00	.CAP	4					
5	20P-H4544-10	.COVER	1					
6	20P-H4544-00	.COVER	1					
7	20P-H4397-00	.COVER, SOCKET	2					
8	20P-H4312-00	.CORD ASSY	2					
9	20P-H4345-00	DAMPER, HEADLIGHT	4					
10	97707-50016	SCREW, TRUSS HEAD TAPPING	5					
11	90183-05042	NUT, SPRING	5					
12	90480-14229	GROMMET	4					
13	90201-05036	WASHER, PLATE	4					
14	97707-50016	SCREW, TRUSS HEAD TAPPING	4					
15	20P-H4359-00	CORD, HEADLIGHT	1					
16	90464-36800	CLAMP	2					

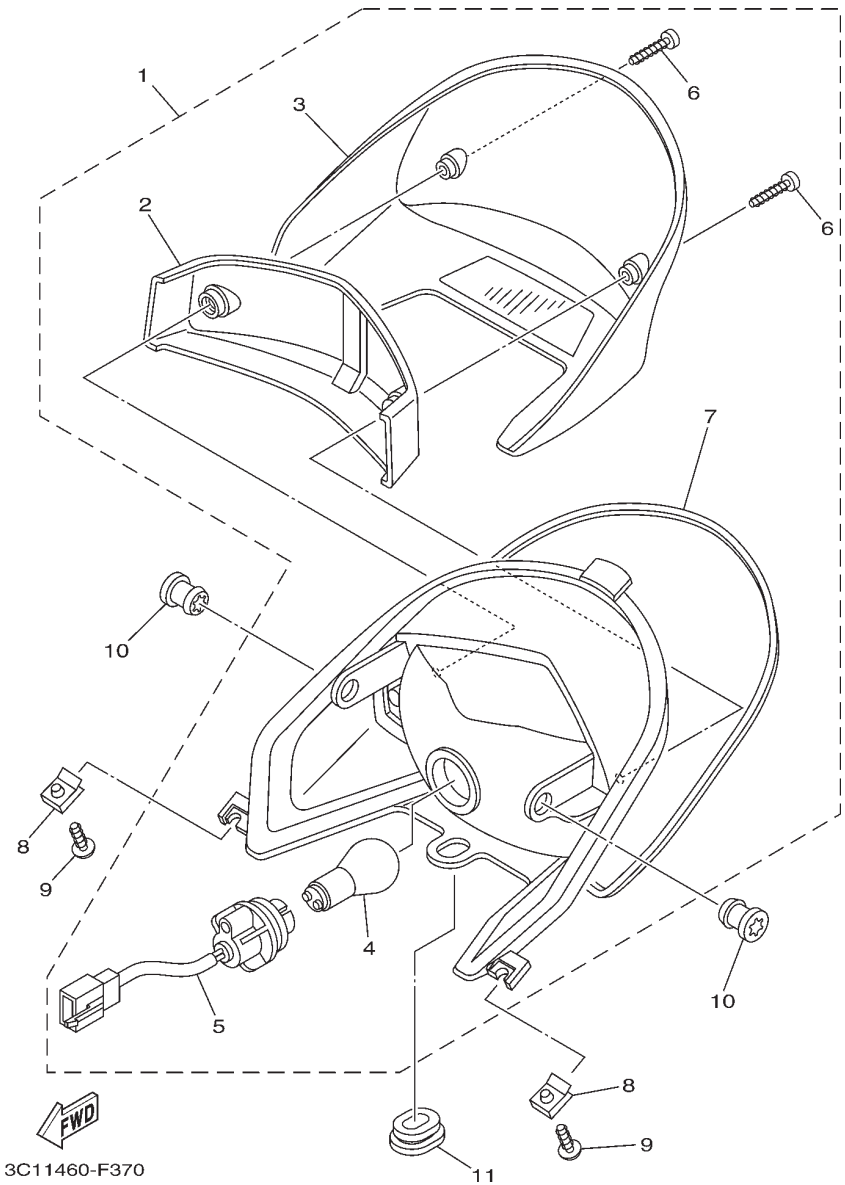

FIG. 40 (8J0) TAILLIGHT

REF. NO.	PART NO.	PART NAME	20P1					REMARKS
1	3C1-H4710-03	TAILLIGHT UNIT ASSY	1					
2	3C1-H4721-01	.LENS, TAILLIGHT	1					
3	3C1-H4733-00	.LENS, TAILLIGHT	1					
4	3C1-H4714-00	.BULB (12V-21/5W)	1					
5	3C1-H4735-00	.CORD ASSY	1					
6	3C1-H4724-00	.SCREW, LENS FITTING	2					
7	3C1-H4704-00	.GASKET, TAILLIGHT	1					
8	90183-05042	NUT, SPRING	2					
9	97707-50014	SCREW, TRUSS HEAD TAPPING	2					
10	90480-13810	GROMMET	2					
11	90480-01558	GROMMET	1					

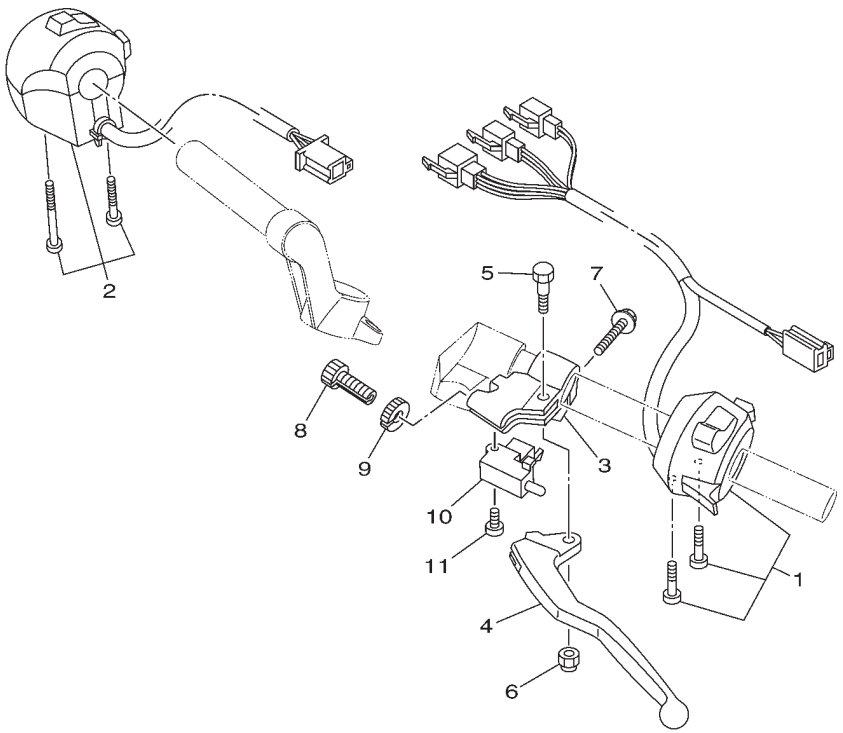

20P1470-G410

FIG. 41 (8T0) HANDLE SWITCH & LEVER

REF. NO.	PART NO.	PART NAME	20P1					REMARKS
1	20P-H3972-00	SWITCH, HANDLE 4	1					
2	20P-H3963-00	SWITCH, HANDLE 3 (RIGHT)	1					
3	20P-H2911-00	HOLDER, LEVER 1	1					
4	20P-H3912-00	LEVER 1	1					
5	20P-H3945-00	BOLT, LEVER	1					
6	20P-H331B-00	NUT, SPRING	1					
7	20P-H3546-00	BOLT	1					
8	20P-H3951-00	BOLT, CABLE ADJUSTING	1					
9	20P-H3927-00	NUT, ADJUSTING	1					
10	3YX-82917-01	SWITCH	1					
11	98707-03020	SCREW, FLAT HEAD	1					

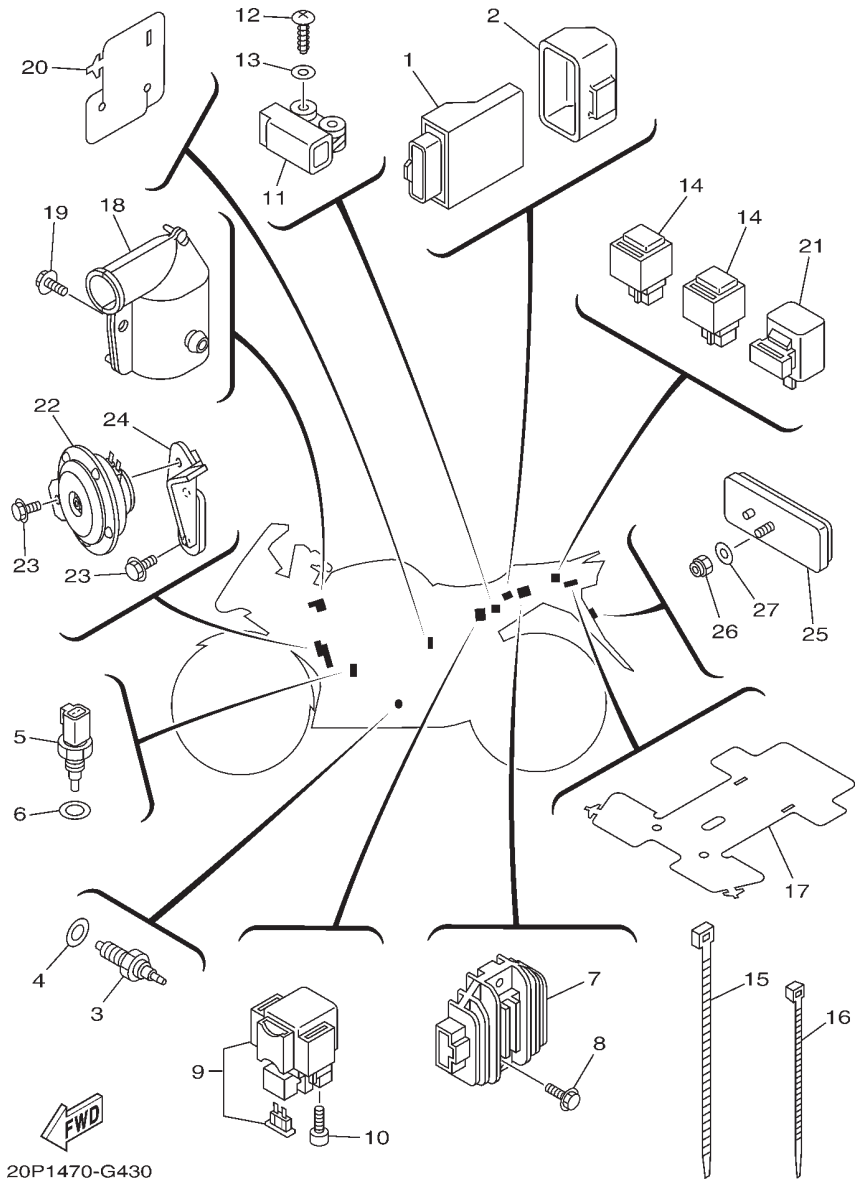

FIG. 43 (8W0) ELECTRICAL 2

REF. NO.	PART NO.	PART NAME	20P1					REMARKS
1	20P-8591A-00	ENGINE CONTROL UNIT ASSY	1					
2	20P-H5546-00	BAND	1					
3	3C1-H2540-00	NEUTRAL SWITCH ASSY	1					
4	90430-10148	GASKET	1					
5	5YP-85790-00	THERMOSENSOR ASSY	1					
6	90430-12801	GASKET	1					
7	3C1-H1960-00	RECTIFIER & REGULATOR ASSY	1					
8	95807-06020	BOLT, FLANGE	2					
9	20P-H1940-00	STARTER RELAY ASSY	1					
10	91317-05008	BOLT	2					
11	3C1-H2576-00	LEAN ANGLE SENSOR	1					
12	97707-40012	SCREW, TAPPING	2					
13	90201-047A2	WASHER, PLATE	2					
14	20P-H1950-00	RELAY ASSY	2					
15	90464-50800	CLAMP	1					
16	90464-36800	CLAMP	10					
17	20P-H2599-00	COVER, CONNECTER	1					
18	20P-H246B-00	COVER 1	1					
19	90119-06054	BOLT, WITH WASHER	1					
20	20P-H2589-00	PROTECTER, WIRE HARNESS	1					
21	5TS-H3350-01	FLASHER RELAY ASSY	1					
22	20P-H3371-00	HORN	1					
23	95807-06012	BOLT, FLANGE	3					
24	20P-F134Y-00	STAY, HORN	1					
25	5US-H5110-00	REFLECTOR ASSY	1					
26	95607-05100	NUT, U	1					
27	90201-05725	WASHER, PLATE	1					

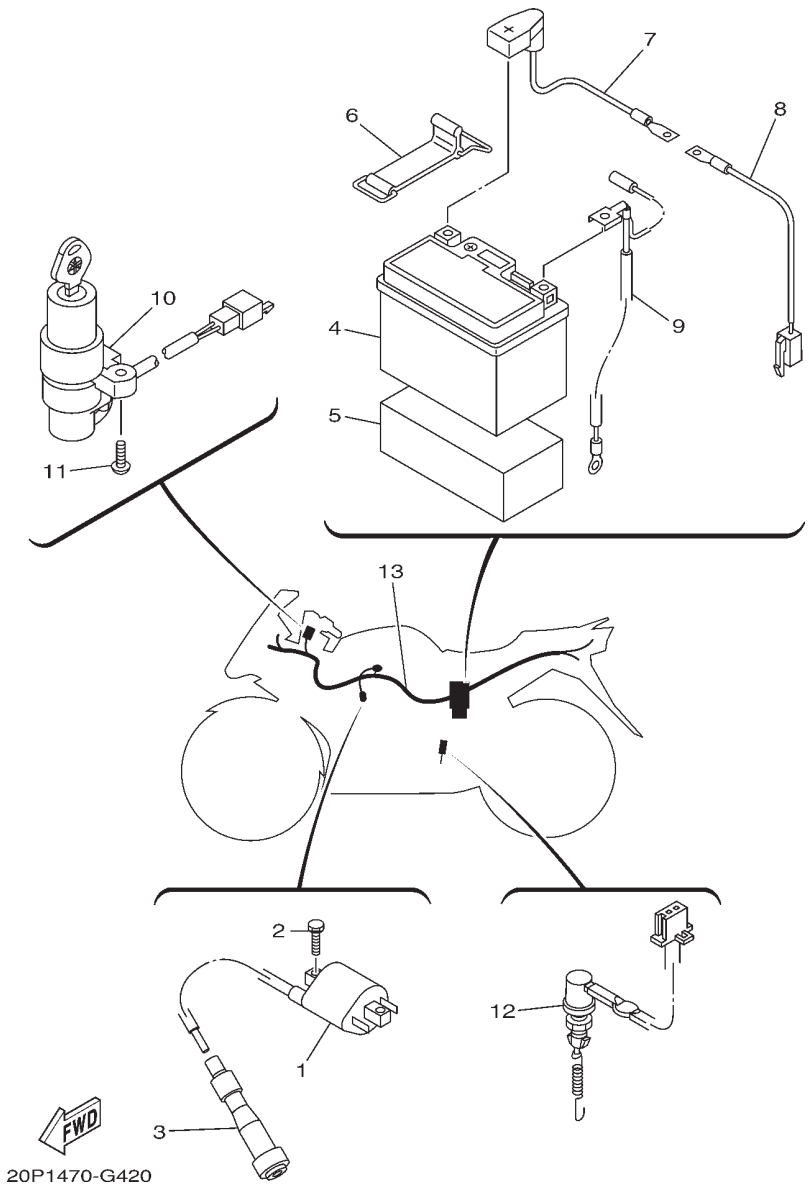

FIG. 42 (8V0) ELECTRICAL 1

REF. NO.	PART NO.	PART NAME	20P1					REMARKS
1	1S4-82310-00	IGNITION COIL ASSY	1					
2	97007-06016	BOLT	2					
3	20P-H2370-00	PLUG CAP ASSY	1					
4	20P-H2100-00	BATTERY ASSY	1					
5	20P-H2121-00	PAD, BATTERY	1					
6	20P-F811G-00	BAND	1					
7	20P-H2115-00	WIRE, PLUS LEAD	1					
8	20P-H2509-00	WIRE, SUB LEAD	1					
9	3C1-H2116-00	WIRE, MINUS LEAD	1					
10	20P-H2501-00	MAIN SWITCH STEERING LOCK	1					
11	90149-06002	SCREW	2					
12	20P-H2530-00	STOP SWITCH ASSY	1					
13	20P-H2590-00	WIRE HARNESS ASSY	1					

INDEX-20P1

PART NO	REF. NO.
164-23462-00	22-24
183-23411-00	21-2
183-23412-00	21-3
1S4-14216-00	8-16
1S4-82310-00	42-1
1S7-E1102-00	1-1
1S7-E111F-00	4-9
1S7-E1133-10	1-2
1S7-E1185-01	5-4
1S7-E1191-00	1-6
1S7-E1193-00	1-14
1S7-E1196-00	5-5
1S7-E1351-00	1-24
1S7-E1951-00	5-8
1S7-E1952-01	5-9
1S7-E2111-00	3-1
1S7-E2121-00	3-2
1S7-E2151-00	3-8
1S7-E2156-00	3-14
1S7-E2161-00	3-11
1S7-E2288-00	4-7
1S7-E2413-00	6-2
1S7-E2428-00	5-3
1S7-E2450-00	5-7
1S7-E3411-00	7-4
1S7-E3440-00	7-7
1S7-E482K-00	1-8
1S7-E4840-00	1-9
1S7-E4890-00	1-10
1S7-E5351-00	7-3
20P-8591A-00	43-1
20P-E1166-00	8-34
20P-E240A-00	6-4
20P-E2467-00	6-14
20P-E2481-00	6-15
20P-E2482-00	6-17

PART NO	REF. NO.
20P-E4411-00	8-18
20P-E4412-00	8-19
20P-E4419-00	8-28
20P-E441J-00	8-29
20P-E443E-00	8-24
20P-E4450-00	8-20
20P-E4453-00	8-21
20P-E4485-00	8-26
20P-E4629-00	9-6
20P-E4703-00	9-1
20P-E4728-00	9-2
20P-E4747-00	17-8
20P-E4799-00	9-7
20P-E4877-00	8-40
20P-E4881-00	8-43
20P-E4882-00	8-36
20P-E4883-00	8-45
20P-E5418-00	11-9
20P-E5666-00	14-30
20P-E6331-00	13-11
20P-E6333-00	13-14
20P-E6356-00	13-17
20P-E8111-00	16-9
20P-E8112-00	16-14
20P-E8113-00	16-10
20P-E8113-00	31-32
20P-E8115-00	16-11
20P-F1110-00	17-1
20P-F117K-00	24-11
20P-F117V-00-P0	34-24
20P-F117V-00-P1	34-24
20P-F117W-00-P0	34-25
20P-F117W-00-P1	34-25
20P-F1338-00	17-12
20P-F134Y-00	43-24
20P-F144G-00	31-35

PART NO	REF. NO.
20P-F1511-00-P0	18-1
20P-F1511-00-P1	18-1
20P-F1611-00	18-7
20P-F1621-00	18-8
20P-F162S-00	17-13
20P-F1685-00	34-19
20P-XF171-00	19-1
20P-XF171-10	19-1
20P-XF172-00	19-2
20P-XF172-10	19-2
20P-F1731-00-P1	19-15
20P-F1741-00-P1	19-16
20P-F1749-00	33-7
20P-F1773-00	33-17
20P-F1823-00	19-14
20P-F1828-00	19-10
20P-F1871-00	19-7
20P-F1875-00	19-9
20P-F2110-00	20-1
20P-F2129-00	20-4
20P-F2141-00	20-5
20P-F2151-00	20-7
20P-F217A-00	20-8
20P-F217F-00	20-12
20P-F2184-00	20-3
20P-F2210-00	20-18
20P-F2311-00	20-15
20P-F2327-00	17-11
20P-F3100-00	22-1
20P-F3110-00	22-12
20P-F3111-00	22-27
20P-F3114-00	22-26
20P-F3118-00	22-21
20P-F3125-00	22-3
20P-F3125-00	22-8
20P-F3126-00	22-2

PART NO	REF. NO.
20P-F3136-00	22-7
20P-F3141-00	22-19
20P-F3144-00	22-6
20P-F3144-00	22-11
20P-F3145-00	22-4
20P-F3145-00	22-9
20P-F3149-00	22-20
20P-F3151-00	22-14
20P-F3156-00	22-5
20P-F3156-00	22-10
20P-F3157-00	22-15
20P-F3158-00	22-17
20P-F3170-00	22-13
20P-F3173-00	22-16
20P-F3181-00	22-18
20P-F3340-00	22-22
20P-F3346-00	22-25
20P-F3416-00	21-5
20P-F3418-00	21-8
20P-F3435-00	21-9
20P-F3469-00	29-5
20P-F3469-00	34-20
20P-F411F-00	23-3
20P-F4141-00	23-23
20P-F4188-00	23-11
20P-F4191-00	23-2
20P-F4312-00	23-19
20P-F4486-00	23-17
20P-F4491-00	23-16
20P-F4730-00	24-1
20P-F4741-00	24-2
20P-F4773-00-P0	24-8
20P-F4773-00-P1	24-8
20P-F4780-00	24-4
20P-F478E-00	24-7
20P-F4792-00	24-5

PART NO	REF. NO.
20P-F510C-00	25-2
20P-F5168-00	25-1
20P-F5181-00	25-10
20P-F5186-00	25-9
20P-F530S-00	27-2
20P-F5338-00	27-1
20P-F5364-00	27-4
20P-F5366-00-33	27-6
20P-F5377-00	27-9
20P-F5381-00	27-16
20P-F5383-00	27-17
20P-F5386-00	27-13
20P-F5388-00	27-19
20P-F5389-00	27-20
20P-F5442-00	27-10
20P-F580W-00	28-3
20P-F582U-00	26-1
20P-F582W-00	28-1
20P-F583V-01	32-1
20P-F5852-00	32-9
20P-F5854-00	32-11
20P-F585B-00	32-10
20P-F5872-00	30-1
20P-F5873-00	32-22
20P-F5876-00	30-19
20P-F587A-00	28-11
20P-F5886-00	30-17
20P-F5887-00	32-25
20P-F5894-00	32-8
20P-F5895-00	32-14
20P-F6121-00	29-1
20P-F6122-00	29-2
20P-F622F-00	29-12
20P-F622H-00	29-11
20P-F6240-00	29-6
20P-F6241-00	29-8

PART NO	REF. NO.
20P-F6242-00	29-7
20P-F6246-00	29-9
20P-F6257-00	29-10
20P-F6280-00	34-13
20P-F6290-00	34-14
20P-F6311-00	29-14
20P-F6315-00	29-15
20P-F6335-00	29-16
20P-F6372-00	29-17
20P-F7211-00	31-31
20P-F7311-00	31-1
20P-F7411-00	31-10
20P-F7411-00	31-23
20P-F7431-00	31-40
20P-F7441-00	31-41
20P-F7442-00	31-8
20P-F7443-00	31-21
20P-F7445-00	31-19
20P-F7446-00	31-38
20P-F7451-00	31-9
20P-F7461-00	31-22
20P-F8100-00	17-17
20P-F811G-00	42-6
20P-F8284-00	17-5
20P-F831U-00	33-13
20P-F832U-00	33-14
20P-F8356-00	34-10
20P-F835G-00-P0	34-6
20P-F835G-00-P1	34-6
20P-F836B-00	19-21
20P-F836M-00	33-15
20P-F836R-00	34-2
20P-F8371-00	34-5
20P-F837L-00	34-38
20P-F837M-00	34-39
20P-F8381-00	34-1

INDEX-20P1

PART NO	REF. NO.
20P-F8483-00	34-15
20P-F8484-00	34-16
20P-F848H-00	33-20
20P-F848K-00	33-21
20P-F848L-00	33-22
20P-F848M-00	33-10
20P-F848N-00	33-11
20P-F848P-00	33-12
20P-H1940-00	43-9
20P-H1950-00	43-14
20P-H2100-00	42-4
20P-H2115-00	42-7
20P-H2121-00	42-5
20P-H2131-00	24-3
20P-H2133-00	37-8
20P-H2133-00	37-16
20P-H2133-00	37-25
20P-H2133-00	37-33
20P-H213A-00	37-6
20P-H213A-00	37-14
20P-H213A-00	37-23
20P-H213A-00	37-31
20P-H2370-00	42-3
20P-H246B-00	43-18
20P-H2501-00	42-10
20P-H2509-00	42-8
20P-H2530-00	42-12
20P-H2589-00	43-20
20P-H2590-00	42-13
20P-H2599-00	43-17
20P-H2911-00	41-3
20P-H3310-00	37-1
20P-H3311-00	37-2
20P-H3311-00	37-10
20P-H3311-00	37-19
20P-H3311-00	37-27

PART NO	REF. NO.
20P-H3318-00	37-3
20P-H3318-00	37-11
20P-H3318-00	37-20
20P-H3318-00	37-28
20P-H331B-00	41-6
20P-H331E-00	37-4
20P-H3320-00	37-9
20P-H332E-00	37-12
20P-H3330-00	37-18
20P-H3333-00	37-7
20P-H3333-00	37-15
20P-H3333-00	37-24
20P-H3333-00	37-32
20P-H333E-00	37-21
20P-H3340-00	37-26
20P-H334E-00	37-29
20P-H3371-00	43-22
20P-H3500-00	38-1
20P-H3546-00	41-7
20P-H3592-00	38-5
20P-H3595-00	38-7
20P-H3596-00	38-8
20P-H3618-00	37-5
20P-H3618-00	37-13
20P-H3618-00	37-22
20P-H3618-00	37-30
20P-H3755-00	38-6
20P-H3912-00	41-4
20P-H3927-00	41-9
20P-H3945-00	41-5
20P-H3951-00	41-8
20P-H3963-00	41-2
20P-H3972-00	41-1
20P-H4300-00	39-1
20P-H4312-00	39-8
20P-H4314-00	39-2

PART NO	REF. NO.
20P-H4345-00	39-9
20P-H4347-00	39-3
20P-H4359-00	39-15
20P-H4378-00	39-4
20P-H4397-00	39-7
20P-H4544-00	39-6
20P-H4544-10	39-5
20P-H5546-00	43-2
20P-W0042-00	32-2
20P-W0046-00	28-9
20P-WF461-00	23-12
20P-WF478-00	24-10
20P-XF171-00-P0	19-20
20P-XF171-00-P1	19-20
20P-XF173-00-P0	19-15
20P-XF174-00-P0	19-16
20P-XF411-00-P0	23-1
20P-XF411-00-P1	23-1
20P-XF836-00-P0	34-33
20P-XF836-00-P1	34-33
20P-XF838-00-33	33-1
20P-XF838-00-P0	33-1
20P-XF839-00-33	33-2
20P-XF839-00-P0	33-2
20P-XF83A-00-P0	34-34
20P-XF83A-00-P1	34-34
21C-E4613-00	9-14
2C0-27435-00	31-14
2C0-27435-00	31-27
2P2-E2210-00	4-17
2S5-1410H-00	8-15
2S6-E2119-00	3-3
2VN-F5866-00	32-6
2YK-F7222-00	32-4
36Y-2589H-00	30-6
3AY-H1801-00	36-2

PART NO	REF. NO.
3AY-H1828-00	36-5
3AY-H182M-00	36-4
3C1-11454-00	2-21
3C1-11531-00	2-22
3C1-11536-00	2-15
3C1-11603-00	2-14
3C1-11681-00	2-3
3C1-12159-00	3-9
3C1-12159-00	3-12
3C1-13770-10	8-9
3C1-13971-00	8-11
3C1-16193-00	13-2
3C1-16357-01	13-24
3C1-16380-01	13-22
3C1-E1181-00	1-19
3C1-E1311-00	1-23
3C1-E1400-00	2-1
3C1-E1412-00	2-2
3C1-E1422-00	2-6
3C1-E1496-00	2-16
3C1-E1549-00	2-7
3C1-E1631-00	2-11
3C1-E1633-00	2-12
3C1-E1651-10	2-5
3C1-E2113-00	3-4
3C1-E2170-00	4-1
3C1-E2241-00	4-13
3C1-E2256-00	4-16
3C1-E2280-00	4-6
3C1-E2422-00	5-1
3C1-E2443-00	5-13
3C1-E3300-00	7-1
3C1-E3324-00	7-8
3C1-E3327-00	7-13
3C1-E3447-00	7-9
3C1-E3542-00	8-3

PART NO	REF. NO.
3C1-E3556-00	8-2
3C1-E3585-00	8-1
3C1-E3586-00	8-6
3C1-E3750-00	8-13
3C1-E3907-00	23-15
3C1-E4452-00	8-22
3C1-E5150-01	10-1
3C1-E5362-00	11-16
3C1-E5411-00	11-1
3C1-E5421-00	11-11
3C1-E5441-00	4-19
3C1-E5451-00	11-2
3C1-E5461-00	11-12
3C1-E5514-00	12-1
3C1-E5521-00	12-2
3C1-E5524-00	12-5
3C1-E5598-00	4-15
3C1-E6111-00	13-1
3C1-E6135-00	13-20
3C1-E6144-00	13-18
3C1-E6150-00	13-5
3C1-E6154-00	13-6
3C1-E6307-00	13-10
3C1-E6324-00	13-12
3C1-E6337-00	13-15
3C1-E6344-00	13-19
3C1-E6345-00	13-23
3C1-E6351-00	13-13
3C1-E6358-00	13-16
3C1-E6371-00	13-7
3C1-E6383-00	13-9
3C1-E6384-00	13-8
3C1-E7121-00	14-7
3C1-E7151-00	14-2
3C1-E7211-00	14-13
3C1-E7221-00	14-21

PART NO	REF. NO.
3C1-E7231-00	14-19
3C1-E7241-00	14-18
3C1-E7251-00	14-15
3C1-E7402-00	14-12
3C1-E7456-00	14-28
3C1-E7471-00	14-10
3C1-E8101-00	16-4
3C1-E8119-00	16-2
3C1-E8140-00	16-1
3C1-E8337-00	16-3
3C1-E8511-00	15-2
3C1-E8512-00	15-3
3C1-E8513-00	15-4
3C1-E8531-00	15-5
3C1-F580U-00	26-3
3C1-F583T-00	30-2
3C1-F5852-00	30-5
3C1-F5855-00	30-8
3C1-F7111-00	31-46
3C1-F7112-00	31-47
3C1-H1410-00	35-2
3C1-H1450-00	35-1
3C1-H1960-00	43-7
3C1-H2116-00	42-9
3C1-H2540-00	43-3
3C1-H2576-00	43-11
3C1-H3922-00	30-9
3C1-H4704-00	40-7
3C1-H4710-03	40-1
3C1-H4714-00	40-4
3C1-H4721-01	40-2
3C1-H4724-00	40-6
3C1-H4733-00	40-3
3C1-H4735-00	40-5
3C1-W0047-00	26-5
3C1-W0057-00	26-4

INDEX-20P1

PART NO	REF. NO.
3FV-F589A-00	32-15
3GD-W0047-00	28-5
3RW-F5854-00	30-4
3RW-F5867-00	30-7
3S0-E2118-00	3-5
3SP-F5914-51	28-8
3YX-82917-01	41-10
4C9-W0045-00	26-12
4ML-F582A-50	32-5
4S3-F5919-00	28-6
4S3-W0048-00	28-7
4S3-W0057-00	28-4
4TT-F7238-00	32-16
4YY-F7114-00	31-52
5BP-H3980-10	30-12
5CA-14147-00	8-10
5D7-8183G-00	36-3
5D7-E7131-00	14-5
5D7-E7161-00	14-6
5D7-E7261-00	14-20
5D7-E7411-00	14-1
5D7-E8540-00	15-1
5D7-H1800-00	36-1
5GM-14766-00	9-8
5HV-E5583-00	12-9
5JW-14104-00	8-14
5LK-23873-01	21-1
5LK-23875-00	22-23
5MT-25398-00	25-8
5MT-25398-10	25-8
5MT-25398-20	25-8
5MX-E2213-00	4-18
5MX-E3575-01	8-17
5ST-E2590-00	6-8
5TL-2341E-00	21-4
5TL-W0041-01	30-3
5TL-W0048-00	26-6
5TS-F1681-20	18-12
5TS-H3350-01	43-21
5US-F3485-00	34-21
5US-H5110-00	43-25
5YP-12117-00	3-6
5YP-12411-00	6-1
5YP-85790-00	43-5
5YP-E2126-00	3-7
5YP-E2157-00	4-8
5YP-E2231-00	4-12
5YP-E2405-00	6-5
5YP-E2671-00	6-7
5YP-E2675-00	6-6
5YP-E5580-00	12-8
5YP-E5614-00	12-10
5YP-F5917-00	26-8
5YP-F5919-00	26-10
5YP-F5924-00	26-11
5YP-F5925-01	26-9
5YP-F5937-00	26-7
5YP-F5939-00	26-13
5YY-F413B-00	23-22
5YY-H3318-10	37-17
5YY-H3318-10	37-34
90105-08850	1-16
90105-10006	21-11
90105-10082	26-14
90105-10123	17-3
90105-10311	20-11
90105-10323	17-2
90105-106A7	31-3
90109-06183	18-10
90109-06183	19-8
90109-063F1	18-9
90109-06577	30-10
90109-08015	28-2
90109-083A8	34-11
90110-05112	23-13
90110-06215	23-9
90110-06287	23-7
90110-08199	31-18
90110-08199	31-37
90110-10012	31-16
90110-10012	31-29
90111-05003	34-31
90111-05003	34-37
90111-05003	34-40
90111-06117	18-4
90111-06117	33-3
90111-06117	34-26
90111-08057	26-2
90116-08552	27-11
90119-06044	19-3
90119-06044	19-17
90119-06044	19-22
90119-06044	32-21
90119-06051	8-33
90119-06054	43-19
90119-06233	18-6
90119-06234	23-6
90149-06002	42-11
90149-06264	9-5
90149-06829	4-14
90150-05024	34-3
90153-06803	1-3
90153-06803	1-25
90159-06033	24-12
90163-05803	8-23
90170-05302	3-10
90170-05302	3-13
90170-10405	2-30
90179-05523	34-4
90179-10023	20-13
90179-10247	17-4
90179-12802	13-4
90179-14001	13-21
90179-25615	21-6
90183-05042	18-11
90183-05042	33-19
90183-05042	34-36
90183-05042	39-11
90183-05042	40-8
90183-05076	33-8
90183-05076	34-7
90183-05076	34-30
90183-06023	8-32
90201-047A2	43-13
90201-05036	38-2
90201-05036	39-13
90201-05725	43-27
90201-06072	6-11
90201-061A5	17-16
90201-06557	18-16
90201-08083	32-18
90201-08609	1-17
90201-08612	9-17
90201-10066	31-17
90201-10066	31-30
90201-10118	30-16
90201-10118	32-24
90201-105E8	12-3
90201-12019	13-3
90201-122H1	35-6
90201-15821	2-17
90201-163H8	31-48
90201-173F4	14-23
90201-20814	14-22
90201-25290	12-7
90202-26142	21-7
90208-20003	13-29
90209-10020	21-12
90209-17285	14-3
90209-18208	14-16
90214-10800	2-18
90215-10284	2-29
90240-08124	32-17
90240-08800	31-12
90240-08800	31-25
90240-08800	31-44
90249-02002	31-15
90249-02002	31-28
90280-03017	2-10
90282-05031	2-28
90338-09802	30-13
90338-16008	8-30
90338-16148	17-10
90338-18122	17-9
90338-30802	11-20
90340-14805	11-5
90340-32810	11-7
90387-06023	9-4
90387-064W3	6-12
90387-06890	23-10
90387-06892	23-4
90387-068C2	33-5
90387-068C2	34-18
90387-068C2	34-28
90387-068C4	34-41
90387-068C8	18-2
90387-068S1	8-41
90387-07819	20-16
90387-08812	17-7
90387-10003	31-4
90387-10814	20-10
90387-15810	2-23
90387-17804	14-14
90387-22591	29-18
90401-10159	30-15
90401-10159	32-23
90413-13800	8-44
90430-06014	1-4
90430-06014	1-13
90430-06014	1-26
90430-09800	8-5
90430-10148	43-4
90430-12801	43-6
90445-08831	19-11
90445-08832	19-12
90445-12804	6-19
90445-16807	31-34
90445-21848	31-7
90445-21848	31-51
90450-28801	6-16
90450-28801	6-18
90450-39804	8-39
90464-20003	34-8
90464-20003	34-32
90464-25160	23-20
90464-25160	34-9
90464-36800	39-16
90464-36800	43-16
90464-50800	30-20
90464-50800	43-15
90467-08003	19-13
90467-08092	8-4
90467-09006	23-21
90467-10808	6-20
90467-12085	32-13
90467-12800	8-25

INDEX-20P1

PART NO	REF. NO.
90467-13802	8-38
90467-13816	8-35
90467-15012	8-37
90467-16800	8-46
90467-20050	8-27
90467-23059	8-31
90480-01558	19-5
90480-01558	19-19
90480-01558	40-11
90480-01559	33-18
90480-01803	6-13
90480-01811	33-6
90480-01870	34-12
90480-01870	34-29
90480-12581	9-3
90480-12805	18-3
90480-13567	19-4
90480-13810	40-10
90480-14003	33-4
90480-14003	34-27
90480-14229	39-12
90480-14816	38-4
90480-15363	6-9
90480-15483	23-5
90480-18549	23-8
90480-18859	18-5
90501-030A0	12-11
90501-06800	15-6
90501-12743	31-42
90501-16800	2-19
90501-18576	7-5
90506-20193	31-33
90506-28800	31-2
90506-35003	31-50
90508-183B9	31-11
90508-184B0	31-24

PART NO	REF. NO.
90508-32837	16-5
91317-05008	43-10
91317-05010	23-14
91317-05010	23-18
91317-06016	35-4
91317-06020	4-20
91317-06020	12-12
91317-06020	29-4
91317-06025	34-17
91317-06025	35-3
91317-06030	29-13
91317-06100	1-22
91317-08025	29-3
91317-08030	21-10
91380-06012	9-10
91380-06016	9-11
91401-20012	16-13
91401-20012	31-13
91401-20012	31-26
91401-20012	31-45
91401-20012	32-19
91401-30030	31-49
91810-14809	1-20
91810-14809	1-21
91810-14809	10-2
91810-14809	11-3
91810-14809	11-13
91811-10005	1-7
92012-06010	31-36
92012-06016	31-20
92012-06016	31-39
92012-08020	32-20
92907-05600	34-23
92907-06200	16-12
92907-06600	18-14
92907-10600	31-5

PART NO	REF. NO.
92990-06200	9-9
92990-06600	9-12
93101-10843	11-18
93102-12862	13-27
93102-12891	16-8
93102-20892	14-26
93103-10801	5-2
93106-17802	20-14
93106-20823	25-4
93106-22806	27-5
93106-26801	27-8
93210-09806	4-3
93210-11803	1-15
93210-11805	2-24
93210-13803	2-25
93210-148F8	11-6
93210-15620	32-7
93210-19809	5-16
93210-198F9	11-17
93210-26805	36-6
93210-32807	8-7
93210-328G3	11-8
93210-34802	7-6
93210-54805	7-12
93210-84801	5-6
93306-000Y3	5-10
93306-001X6	4-4
93306-003Y7	14-24
93306-004XR	14-8
93306-054Y5	27-7
93306-201X8	25-5
93306-203XK	2-27
93306-204YL	14-25
93306-252Y9	2-26
93306-252YH	27-3
93306-252YL	14-9

PART NO	REF. NO.
93306-301XN	25-3
93306-305X7	2-9
93306-305YF	2-8
93306-906Y0	4-2
93310-325X1	12-6
93310-528YB	2-4
93315-112Y8	13-26
93315-31758	20-9
93317-21717	20-2
93410-20038	14-4
93410-22039	14-17
93450-16115	2-13
93501-04805	31-43
93503-16048	13-25
93604-08800	2-20
93608-30839	16-7
93822-14815	14-27
93900-00824	25-7
93900-00824	27-15
94108-17831	25-6
94110-17803	27-14
94568-A8096	4-11
94568-B8120	27-21
94703-00883	1-18
95022-06016	11-10
95027-06010	4-10
95027-06010	14-29
95027-06010	32-26
95027-06012	5-12
95027-06014	1-11
95027-06014	38-9
95027-06016	30-18
95027-06020	1-12
95027-06020	6-3
95027-06025	5-11
95027-06025	5-14

PART NO	REF. NO.
95027-06025	30-14
95027-06050	5-15
9502L-06012	7-14
9502L-06020	7-10
9502L-06040	10-6
9502L-06040	11-4
9502L-06040	11-14
9502L-06045	10-4
9502L-06050	11-15
9502L-06055	10-3
9502L-06070	10-5
9502L-06080	7-11
9502L-06090	11-19
9502N-06020	8-8
95301-08700	32-3
95307-06600	18-15
95607-05100	43-26
95607-06100	30-11
95607-08200	27-12
95607-12200	25-11
95607-14200	27-18
95617-08620	1-5
95617-10100	31-6
95707-06500	24-6
95707-08500	9-15
95707-12500	20-6
95707-12500	35-5
95807-06012	43-23
95807-06020	43-8
95817-06014	17-15
95817-06025	17-14
95817-06030	8-12
95817-08016	17-6
95817-08025	9-16
95817-08040	9-18
95817-10030	28-10

PART NO	REF. NO.
95827-06014	20-17
95827-06025	6-10
95827-08020	24-9
97007-06016	42-2
97024-06020	16-15
97027-06014	8-42
97080-06008	9-13
97707-40012	43-12
97707-50012	33-9
97707-50012	33-16
97707-50012	34-35
97707-50014	19-6
97707-50014	19-18
97707-50014	40-9
97707-50016	38-3
97707-50016	39-10
97707-50016	39-14
98507-05012	34-22
98507-05025	7-2
98507-06014	18-13
98517-06012	14-11
98707-03020	41-11
98707-04045	32-12
99001-10600	16-6
99009-10400	12-4
99009-17400	14-31
99009-20500	13-28
99480-05010	4-5